Standard and Certifications 標準與認證

UL Std NO.508 17th Ed - Industrial Control Equipment to the requirements of CSA standard NO. 14-05 auxiliary device, contact rated 120VAC 6A, resistive, heavy pilot duty or A600 with NC and NO contact, used for push button switches, selector switches, double push button switches, push button switches with illuminated, selector switches with illuminated, pilot lights.

Technical data 技術參數

Insulation volatge Ui 額定絕緣電壓 : 600V	Life 壽命
Thermal current 1th (A) 額定發熱電流 : 10A	Push buttons 按鈕開關 : 1 million oprations
Short circuit current : 1000A	Selector and Key selector 選擇, 鑰匙開關 : 600,000 operations
AC15 120V 6A , 240V 3A	Contact blocks 接點組 : 1million operations
AC12 480V 1.5A , 600V 1.2A	
DC12 120V 2.2A , 240V 0.6A , 480V 0.4A	
Ambient temperature 工作溫度 : -20 to 60 °C	
Contact resistance 接觸電阻 : 50mΩ max	
IP Enclosure 保護等級 : IP65	

Bulb type 燈泡規格

Bulb type: Ba9s LED lamp	voltage 電壓 : AC/DC 6V, AC/DC 12V, AC/DC 24V, AC110V, AC220V
Bulb type: SMD LED lamp	voltage 電壓 : AC/DC 6V, AC/DC 12V, AC/DC 24V, AC110V, AC220V
Bulb life 壽命 : ≧ 30,000 hours , ≧ 3萬小時	
Colours of bulb 燈泡顏色 : Ⓡ Ⓖ Ⓨ BL Ⓦ	

S-9 LED lamp 燈泡 Rated voltage 電壓 : 6V, 12V, 24V, 110V, 220V

Type: S - 9L - ☐ - ☐



Ⓡ Ⓖ Ⓨ BL Ⓦ

S-9 SMD LED lamp 燈泡 voltage 電壓 : 6V, 12V, 24V, 110V, 220V

Type: S - 9SL - ☐ - ☐



Ⓡ Ⓖ Ⓨ BL Ⓦ

S-9 Lamp holder 燈座

Type: T2 - LH



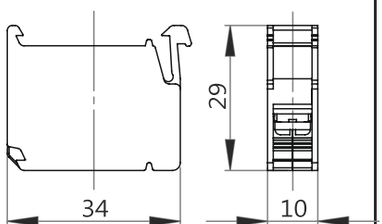

Contact block 接點 Dimensions 尺寸

T2 - 10 (NO, 1a)



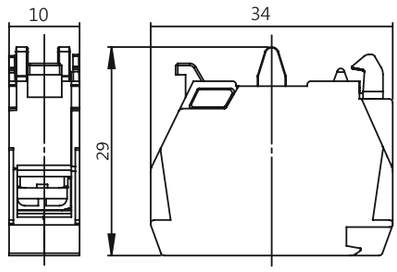

Contact block 接點

T2 - 01 (NC, 1b)



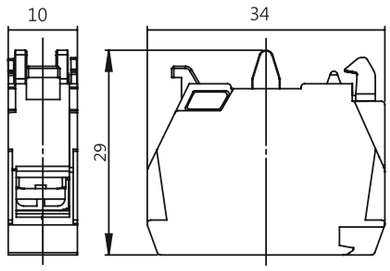

Coupler 連接座

T2 - CP



Metal ring 金屬環

T2 - MR



T2-PL T2-MPL



Pilot lamp 指示燈

規格型號 Type		電壓 Voltage		顏色 Colour
T2	PL- □□	110V	1	R
	MPL- □□	220V	2	G
	MRPL- □□	380V	3	Y
	L- □□	440V	4	BL
	MRL- □□	6V	6	W
		12V	12	
		24V	24	

① ② ③ ④

Dimensions 尺寸

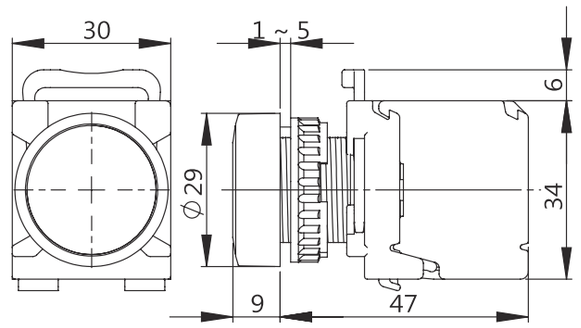

T2-MRPL T2-L T2-MRL



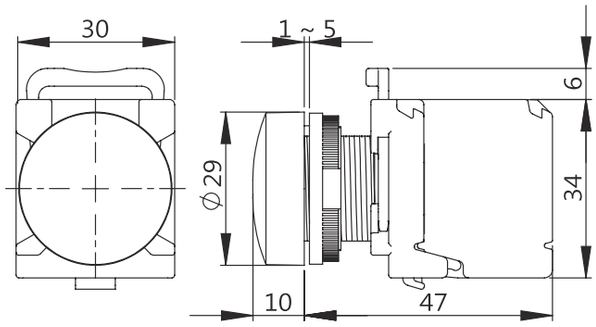

PUSH BUTTON SWITCH 按鈕開關

Ordering information (22mmΦ & 25mmΦ mounting)

T2 - [1] [2] [3] [4]

1. Actuators material 頭部材質

P	Engineering plastic 工程塑膠
M	Metal head 鑲金屬圈頭
MR	Metal head & Metal ring 鑲金屬圈頭 & 金屬鎖緊圈
R	Metal ring 金屬鎖緊圈

2. Type 頭型

F	Flat 平頭
L	Long head 凸頭
M	Mushroom 洋菇頭
ES	Emergency stop 洋菇頭急停
DB	Double - touch 雙頭按鈕
DBF	Double button flat head 雙平頭按鈕
PF	Push ON - Push OFF 交替式按鈕
PR	E-stop, Latch, Pull to Release 按拉式急停
EK	Mushroom key lock 鎖扣式洋菇頭按鈕

P: Engineering plastic



M: Metal head





R: Metal ring



MR: Metal head & Metal ring

3. Type of contact 接點型式

圖型 Symbol					
接點代碼 Codes	10	01	11	20	02
接點 Contacts	NO	NC	NO+NC	2NO	2NC
	一常開	一常閉	一常開一常閉	二常開	二常閉

4. Colour 顏色

R 紅	G 綠	Y 黃	BL 藍	W 白	BK 黑

T2-PF Engineering plastic head　Push button switch 平頭按鈕



規格型號 Type			接點 Contact	顏色 Colour
T2	PF	– 10 – ☐	1N/O	R
	MF	– 01 – ☐	1N/C	G
	MRF	– 11 – ☐	1NO+1NC	Y
		– 20 – ☐	2N/O	BL
		– 02 – ☐	2N/C	W
				B

T2-PF: Engineering plastic head

T2-MF: Metal ring

T2-MRF: Metal head & Metal ring

Dimensions 尺寸

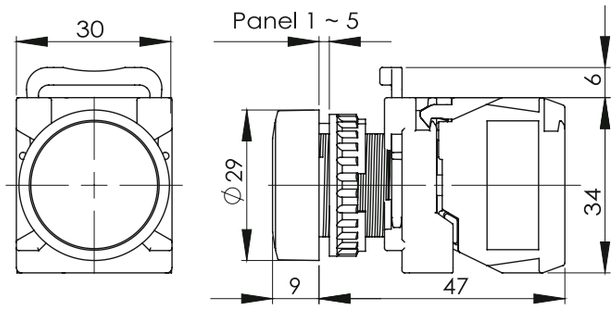

T2-PPF Engineering plastic head　Push ON - Push OFF switch 交替式按鈕



規格型號 Type			接點 Contact	顏色 Colour
T2	PPF	– 11 – ☐	1NO+1NC	R
	MPF	– 20 – ☐	2N/O	G
	MRPF	– 02 – ☐	2N/C	Y
				BL
				W

T2-PPF: Engineering plastic head

T2-MPF: Metal ring

T2-MRPF: Metal head & Metal ring

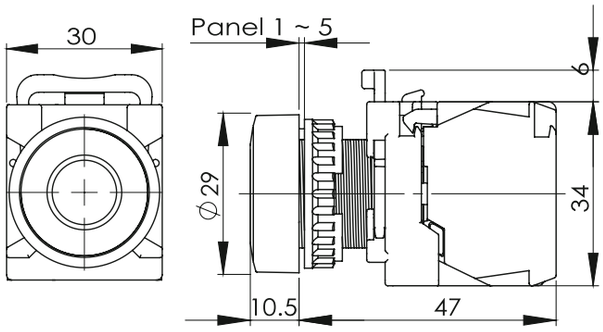

T2-PMS 35Φ head, T2-PM 40Φ head　Mushroom head push button 洋菇頭按鈕



規格型號 Type			接點 Contact	顏色 Colour
T2	PM	– 10 – ☐	1N/O	R
	PRM	– 01 – ☐	1N/C	G
	PMS	– 11 – ☐	1NO+1NC	Y
	PRMS	– 20 – ☐	2N/O	
		– 02 – ☐	2N/C	

T2-PMS: mushroom head 35mmφ

T2-PRMS: mushroom head 35mmφ

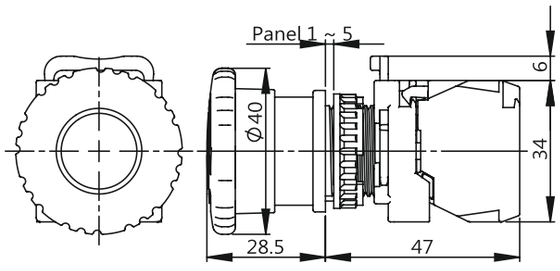

T2-PESS 35Φ head, T2-PES 40Φ head　Mushroom head E-stop 洋菇頭急停



規格型號 Type			接點 Contact	顏色 Colour
T2	PES	– 10 – ☐	1N/O	
	PRES	– 01 – ☐	1N/C	
	PESS	– 11 – ☐	1NO+1NC	R
	PRESS	– 20 – ☐	2N/O	
		– 02 – ☐	2N/C	

T2-PESS: mushroom head 35mmφ

T2-PRESS: mushroom head 35mmφ

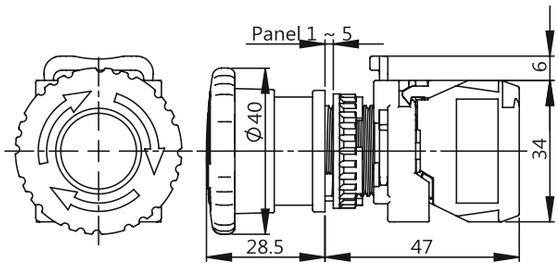

T2-DBF Plastic ring

Double touch flat head 雙平頭按鈕



規格型號 Type			接點 Contact	顏色 Colour
T2	DBF DBFR	– 11 – ☐ – 20 – ☐ – 02 – ☐	1NO+1NC 2N/O 2N/C	R G

T2-DBF: Plastic ring

T2-DBFR: Metal ring

Dimensions 尺寸

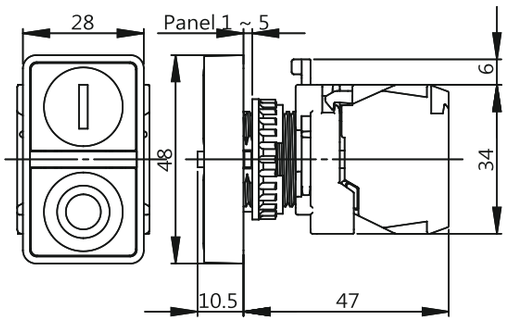

T2-DB Plastic ring

Double touch button 雙頭高低按鈕



規格型號 Type			接點 Contact	顏色 Colour
T2	DB DBR	– 11 – ☐ – 20 – ☐ – 02 – ☐	1NO+1NC 2N/O 2N/C	R G

T2-DB: Plastic ring

T2-DBR: Metal ring

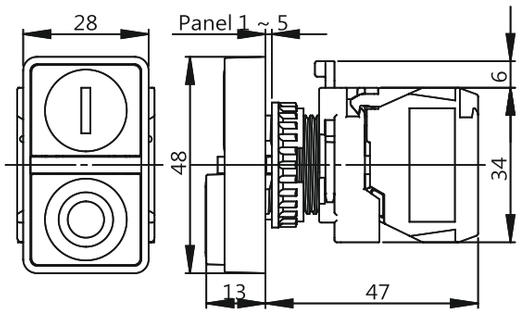

T2-EK Plastic ring

Mushroom key lock 鎖扣式按鈕



規格型號 Type			接點 Contact	顏色 Colour
T2	EK REK	– 10 – ☐ – 01 – ☐ – 11 – ☐ – 20 – ☐ – 02 – ☐	1N/O 1N/C 1NO+1NC 2N/O 2N/C	 R

T2-EK: Plastic ring

T2-REK: Metal ring

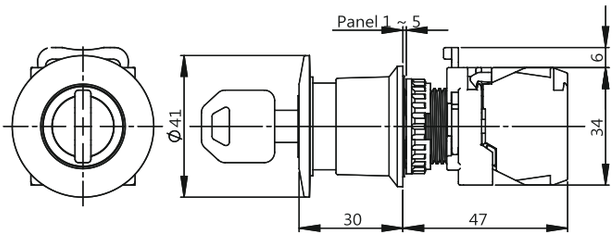

T2-PR Plastic ring

E-stop, Latch, Pull to release 按拉式急停



規格型號 Type			接點 Contact	顏色 Colour
T2	PR RPR	– 10 – ☐ – 01 – ☐ – 11 – ☐ – 20 – ☐ – 02 – ☐	1N/O 1N/C 1NO+1NC 2N/O 2N/C	 R

T2-PR: Plastic ring

T2-RPR: Metal ring

