Base Mounting Rotary Switch
Panel Mounting Rotary Switch 電門開關

Feature 特性 :

- Main switches are available in 3 & 4 pole, auxiliary contacts can be added as per request.
  Current ratings: 16A, 25A, 32A, 40A, 63A, 80A.
- ○ 本電門開關有3P、4P系列，依需求可加裝輔助接點，電流容量分為16A、25A、32A、40A、63A、80A。
- Mounting form: Four Hole Panel Mounting or Base Mounting with Simplified Door Clutch and Padlock Device.
  (The switch unit can be mounted on din rail that is inside of the control panel while the upper control unit and handle are being mounted on the control panel surface.)
- ○ 安裝方式有面板固定式、分離式（接點在控制箱內也可用軌道式固定，上座與把手固定在控制面板上）。

Ordering information

□ – □ □ □ □ □

① ② ③ ④ ⑤ ⑥

Item	Style	Description
1. Rating 容量	DS16	3 pole 16A
	DS25	3 pole 25A
	DS32	3 pole 32A
	DS40	3 pole 40A
	DS63	3 pole 63A
	DS80	3 pole 80A
	DS416	4 pole 16A
	DS425	4 pole 25A
	DS432	4 pole 32A
	DS440	4 pole 40A
	DS463	4 pole 63A
	DS480	4 pole 80A
2. Type of mounting 固定方式	P	panel mounting
	B	base mounting rail mounting
	E	plastic enclosed
3. Type of handle 把手型式	S	standard knob panel mounting
	R	round handle padlockable 22 hole
	SR	round handle square frame 22 hole
4. Handle colour 面板,把手顏色	R	red handle / yellow base
	B	black handle / grey base
5. Rod length for base mounting only 連桿長度 L	1	100 mm
	2	150 mm
	3	250 mm
	4	300 mm
6. Auxiliary contact 輔助接點	1	1 pole
	2	2 pole
	3	3 pole

Specification

voltage 電壓 \ style 型號		DS16 DS416	DS25 DS425	DS32 DS432	DS40 DS440	DS63 DS463	DS80 DS480
AC3 (KW)	220V ~ 240V	2.2	4.0	5.5	7.5	11.0	15.0
	380V ~ 440V	3.7	5.5	7.5	11.0	18.5	22.0
	660V ~ 690V	3.7	5.5	7.5	15.0	22.0	30.0
AC23 (KW)	220V ~ 240V	3.0	5.5	5.5	7.5	11.0	18.5
	380V ~ 440V	5.5	7.5	11.5	15.0	22.0	30.0
	660V ~ 690V	5.5	7.5	11.5	18.5	30.0	37.0
AC21		16A	25A	32A	40A	63A	80A

voltage 電壓 \ style 型號		DS16 DS416	DS25 DS425	DS32 DS432	DS40 DS440	DS63 DS463	DS80 DS480
AC-3 (HP)	110V ~ 120V	1	1.5	2	3	5	7.5
	220V ~ 240V	2	3	5	7.5	10	20
	380V ~ 440V	3	5	10	15	20	40
	500V ~ 600V	3	5	10	15	20	50

Mounting dimensions 面板固定尺寸

Panel mounting
面板固定孔

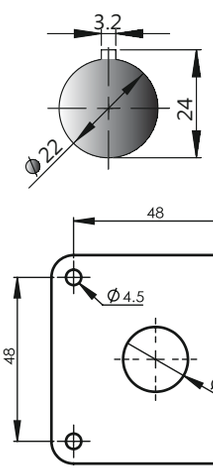

Base mounting Rail dimensions
軌道尺寸

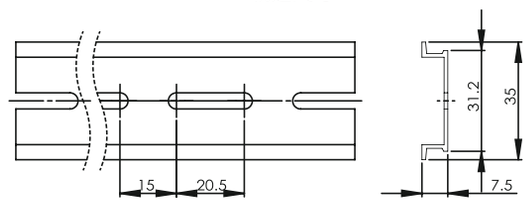

Connecting diagram 接線圖

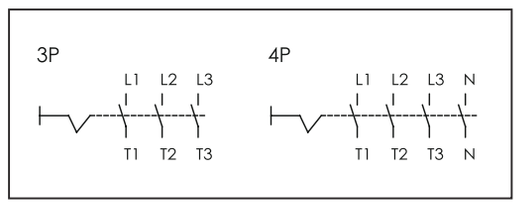

DS16/25/32/40 - P/S/R | DS16/25/32/40 - P/S/B | 3pole 16A, 25A, 32A, 40A | Panel mounting 面板固定式




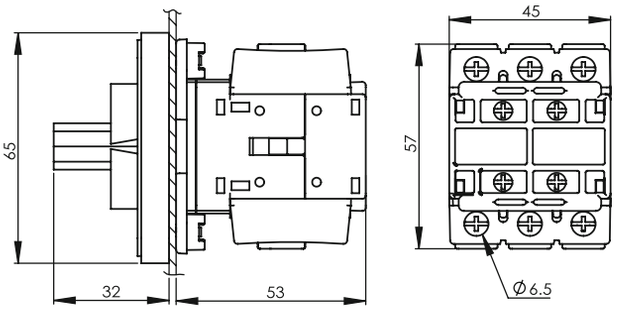

DS16/25/32/40 - P/SR/R | DS16/25/32/40 - P/SR/B | 3pole 16A, 25A, 32A, 40A | Panel mounting 面板固定式




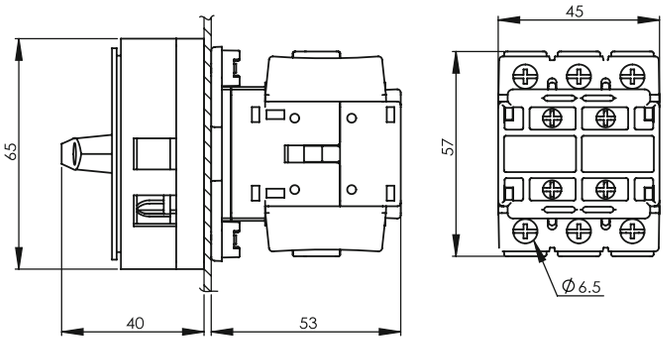

DS16/25/32/40 - B/R/R | DS16/25/32/40 - B/R/B | 3pole 16A, 25A, 32A, 40A | Base mounting 軌道固定式




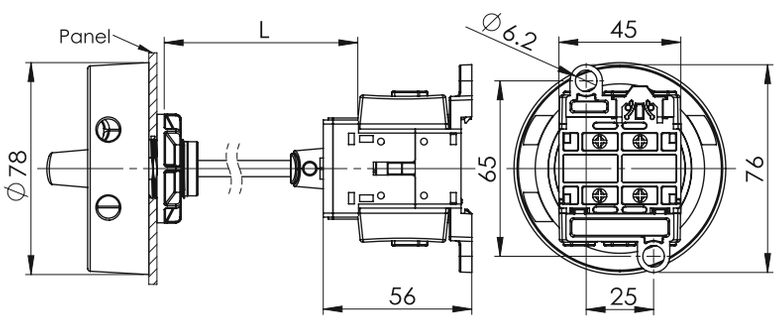

DS16/25/32/40 - B/SR/R | DS16/25/32/40 - B/SR/B | 3pole 16A, 25A, 32A, 40A | Base mounting 軌道固定式




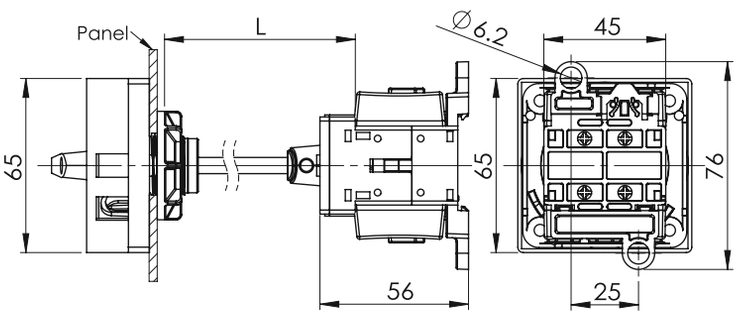

DS416/425/432/440 - P/S/R

DS416/425/432/440 - P/S/B

4pole 16A, 25A, 32A, 40A

Panel mounting 面板固定式





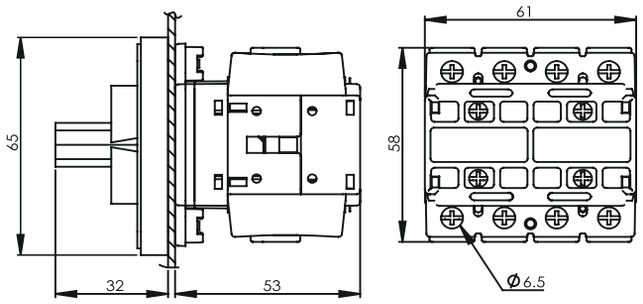

DS416/425/432/440 - P/SR/R

DS416/425/432/440 - P/SR/B

4pole 16A, 25A, 32A, 40A

Panel mounting 面板固定式





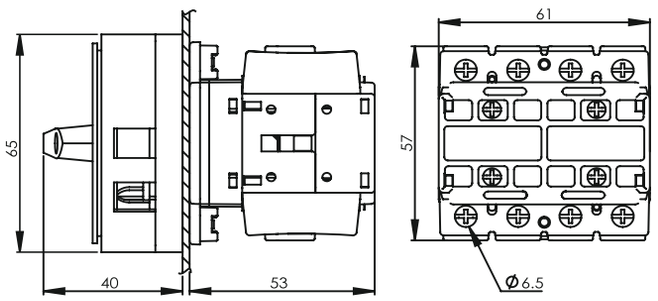

DS416/425/432/440 - B/R/R

DS416/425/432/440 - B/R/B

4pole 16A, 25A, 32A, 40A

Base mounting 軌道固定式





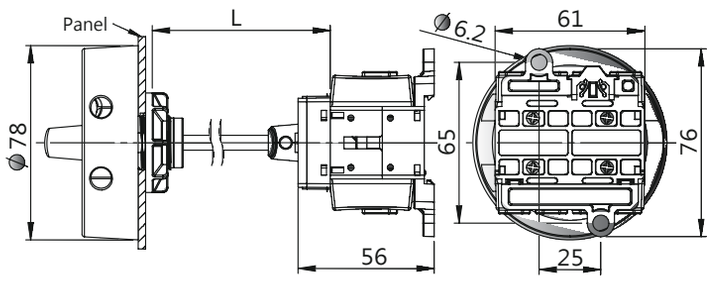

DS416/425/432/440 - B/SR/R

DS416/425/432/440 - B/SR/B

4pole 16A, 25A, 32A, 40A

Base mounting 軌道固定式





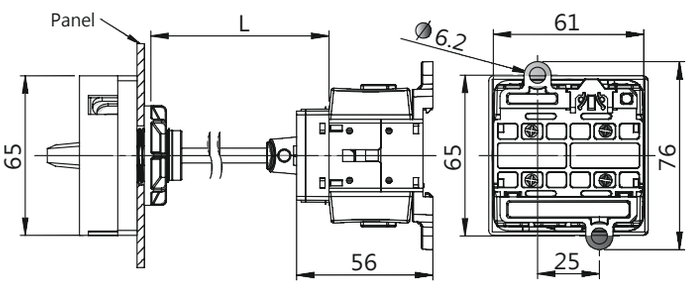

DS63/80 - P/S/R　　DS63/80 - P/S/B　　3pole 63A, 3pole 80A　　Panel mounting 面板固定式




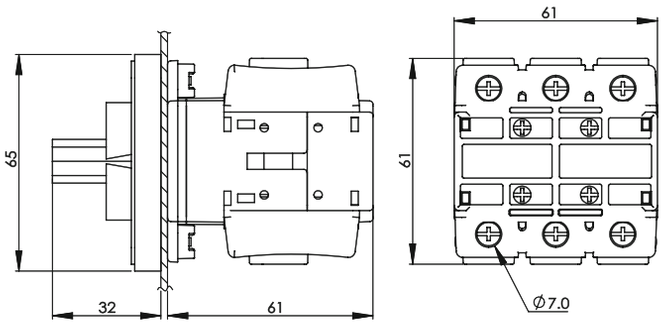

DS63/80 - P/SR/R　　DS63/80 - P/SR/B　　3pole 63A, 3pole 80A　　Panel mounting 面板固定式




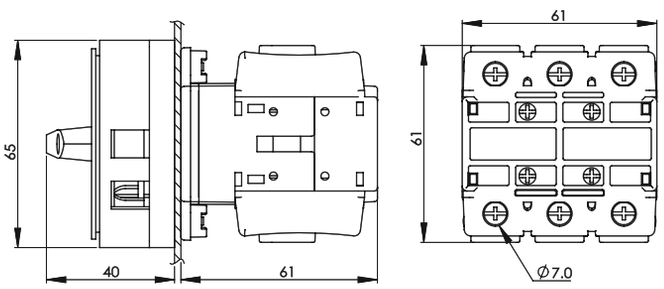

DS63/80 - B/R/R　　DS63/80 - B/R/B　　3pole 63A, 3pole 80A　　Base mounting 軌道固定式




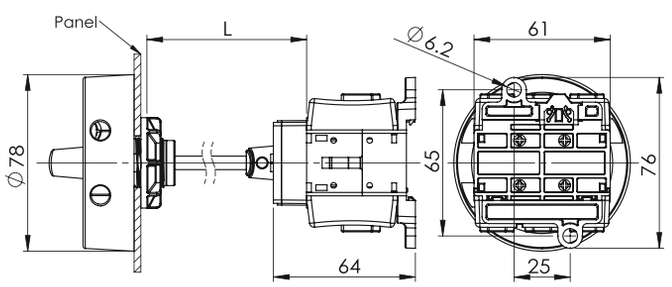

DS63/80- B/SR/R　　DS63/80- B/SR/B　　3pole 63A, 3pole 80A　　Base mounting 軌道固定式




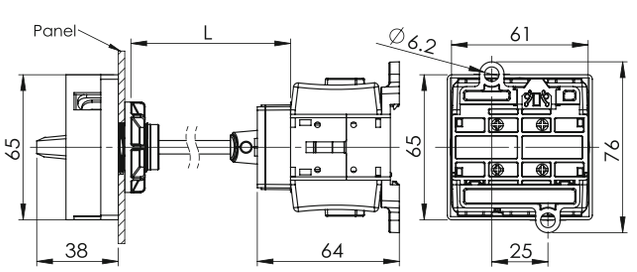

DS463/480 - P/S/R　DS463/480 - P/S/B　4pole 63A, 4pole 80A　Panel mounting 面板固定式




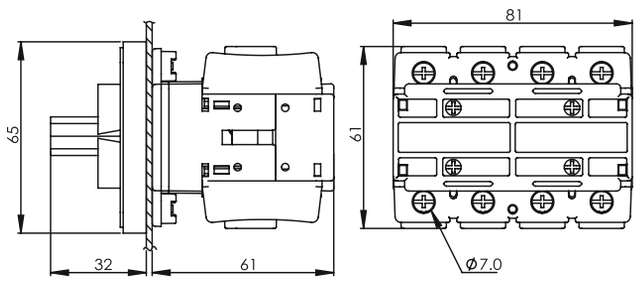

DS463/480 - P/SR/R　DS463/480 - P/SR/B　4pole 63A, 4pole 80A　Panel mounting 面板固定式




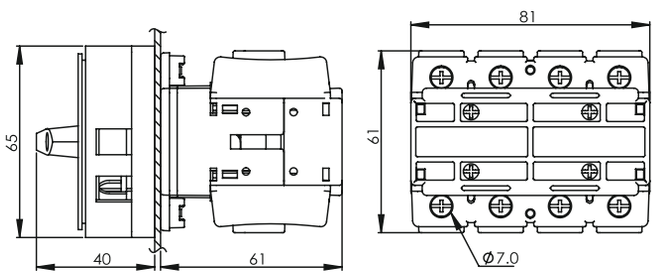

DS463/480 - B/R/R　DS463/480 - B/R/B　4pole 63A, 4pole 80A　Base mounting 軌道固定式




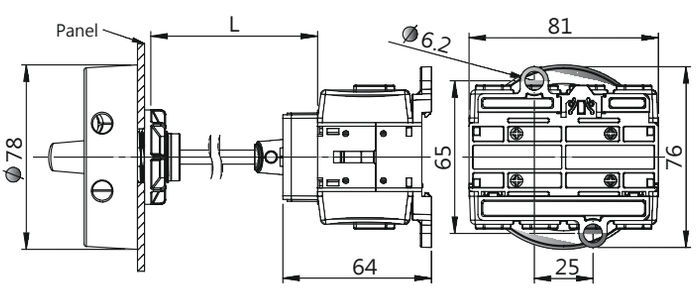

DS463/480- B/SR/R　DS463/480- B/SR/B　4pole 63A, 4pole 80A　Base mounting 軌道固定式




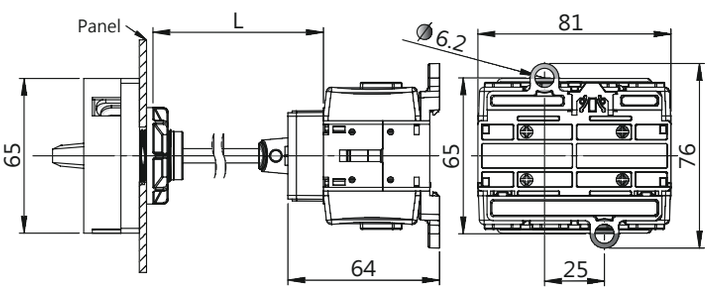

■ Rotary Switch In Plastic Enclosure

DS - ☐ - E/R/R　DS - ☐ - E/R/B　3pole 16A, 25A, 32A, 40A, 63A, 80A
DS - ☐ - E/R/R　DS - ☐ - E/R/B　4pole 16A, 25A, 32A, 40A, 63A, 80A



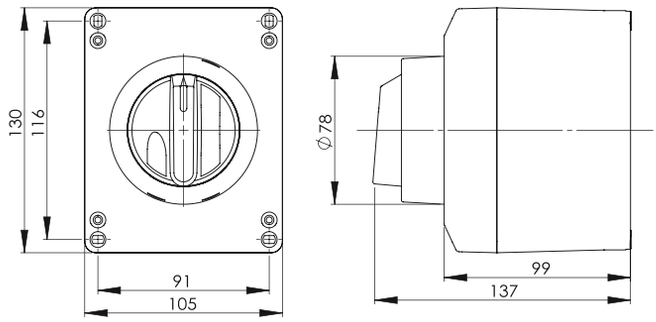

22Φ mounting enclosure : DS-ER1

DS - ☐ - E/SR/R　DS - ☐ - E/SR/B　3pole 16A, 25A, 32A, 40A, 63A, 80A
DS - ☐ - E/SR/R　DS - ☐ - E/SR/B　4pole 16A, 25A, 32A, 40A, 63A, 80A



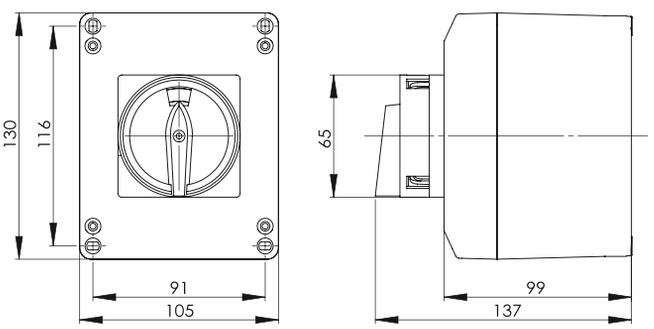

48x48 mounting enclosure : DS-ES1

DS - ☐ - E/R/R　DS - ☐ - E/SR/R



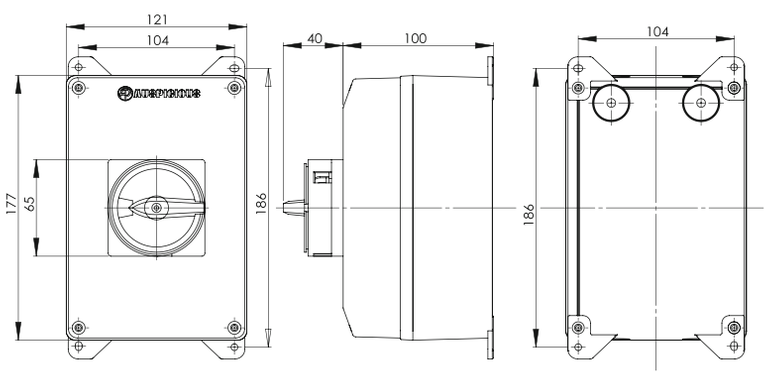

22Φ mounting enclosure : DS-ER2　　48x48 mounting enclosure : DS-ES2

■ 輔助接點座 Auxiliary Contact 16A, 25A, 32A

DS16/32 - AF/AB ☐　　☐ : 空白=1P; 2=2P; 3=3P (單側)



代號	說明
DS16-AF	16A 固定式輔助接點座
DS32-AF	32A 固定式輔助接點座
DS16-AB	16A 分離式輔助接點座
DS32-AB	32A 分離式輔助接點座

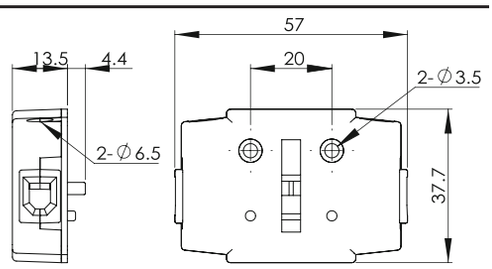

- 可於相同電壓做主接點座用或不同電壓做輔助接點座用。
- 最多配合可單邊側掛三組輔助接點座。

■ 固定式組立圖　　Panel Mounting 面板固定式

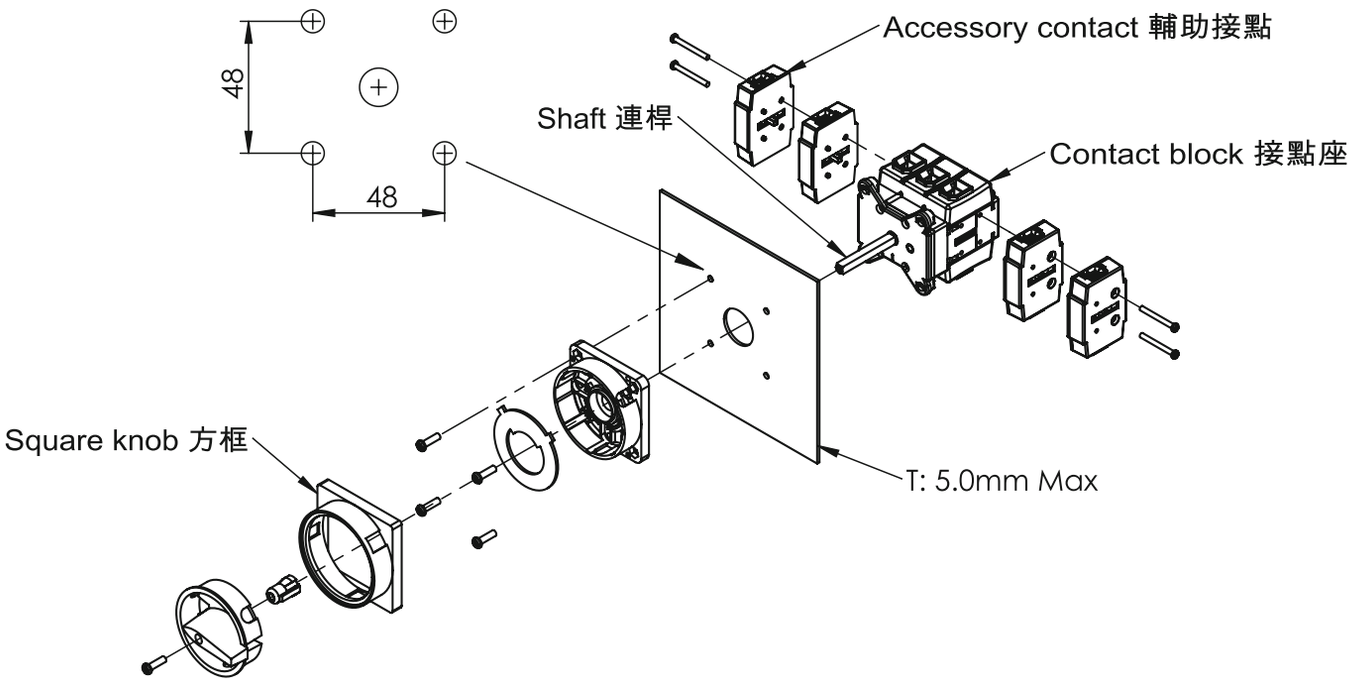

■ 分離式組立圖　　Din Rail Base Mounting 軌道固定式

Note: The switch can either be mounted in an enclosure or on a panel board.

