Standard and Certifications 標準與認證

UL Std NO.508 17th Ed - Industrial Control Equipment to the requirements of CSA standard NO. 14-05 auxiliary device, contact rated 120VAC 6A, resistive, heavy pilot duty or A600 with NC and NO contact, used for push button switches, selector switches, double push button switches, push button switches with illuminated, selector switches with illuminated, pilot lights.

Technical data 技術參數

Insulation volatge Ui 額定絕緣電壓 : 600V	Life 壽命
Thermal current 1th (A) 額定發熱電流 : 10A	Push buttons 按鈕開關 : 1 million oprations
Short circuit current : 1000A	Selector and Key selector 選擇, 鑰匙開關 : 600,000 operations
AC15 120V 6A , 240V 3A	Contact blocks 接點組 : 1million operations
AC12 480V 1.5A , 600V 1.2A	
DC12 120V 2.2A , 240V 0.6A , 480V 0.4A	
Ambient temperature 工作溫度 : -20 to 60 °C	
Contact resistance 接觸電阻 : 50mΩ max	
IP Enclosure 保護等級 : IP65	

Bulb type 燈泡規格

Bulb type: Ba9s LED lamp	voltage 電壓 : AC/DC 6V, AC/DC 12V, AC/DC 24V, AC110V, AC220V
Bulb type: SMD LED lamp	voltage 電壓 : AC/DC 6V, AC/DC 12V, AC/DC 24V, AC110V, AC220V
Bulb life 壽命 : ≧ 30,000 hours , ≧ 3萬小時	
Colours of bulb 燈泡顏色 : Ⓡ Ⓖ Ⓨ BL Ⓦ	

S-9 LED lamp 燈泡 Rated voltage 電壓 : 6V, 12V, 24V, 110V, 220V

Type: S - 9L - ☐ - ☐



Ⓡ Ⓖ Ⓨ BL Ⓦ

S-9 SMD LED lamp 燈泡 voltage 電壓 : 6V, 12V, 24V, 110V, 220V

Type: S - 9SL - ☐ - ☐



Ⓡ Ⓖ Ⓨ BL Ⓦ

S-9 Lamp holder 燈座

Type: T2 - LH



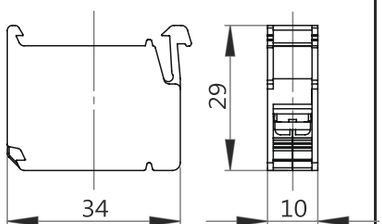

Contact block 接點 Dimensions 尺寸

T2 - 10 (NO, 1a)



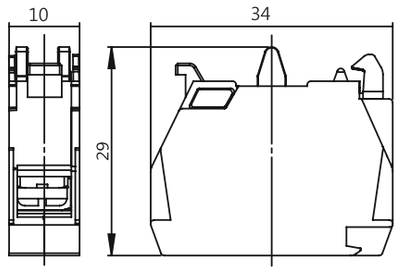

Contact block 接點

T2 - 01 (NC, 1b)



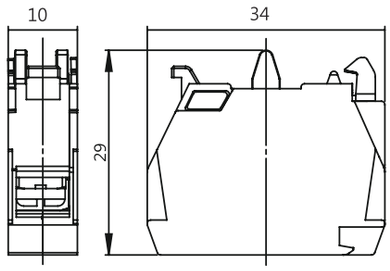

Coupler 連接座

T2 - CP



Metal ring 金屬環

T2 - MR



ILLUMINATED PUSH BUTTON SWITCH 照光按鈕開關

T2 - | 1 | 2 | 3 | 4 | 5 |

1. Actuators material 頭部材質

P	Engineering plastic 工程塑膠
M	Metal head 鑲金屬圈頭
MR	Metal head & Metal ring 鑲金屬圈頭 & 金屬鎖緊圈
R	Metal ring 金屬鎖緊圈

2. Type 頭型

LF	Illuminated flat 照光平頭
GF	Illuminated guard 照光保護型
ML	Illuminated mushroom 洋菇頭照光按鈕
ESL	Illuminated emergency stop 連鎖洋菇頭急停
DBFL	Illuminated double button flat head 雙平頭照光按鈕
DBL	Illuminated double touch 雙頭照光按鈕
PFL	Illuminated Push ON - Push OFF 交替式照光按鈕

3. Type of contact 接點型式

圖型 Symbol					
接點代碼 Codes	10	01	11	20	02
接點 Contacts	NO	NC	NO+NC	2NO	2NC
	一常開	一常閉	一常開一常閉	二常開	二常閉

4. Voltage 電壓

1	110V	6	6V
2	220V	12	12V
3	380V	24	24V
4	440V		

5. Colour 顏色

R 紅	G 綠	Y 黃	BL 藍	W 白

T2-PLF Engineering plastic head Illuminated push button 平頭照光按鈕

Dimensions 尺寸



規格型號 Type			接點 Contact	電壓 Voltage	顏色 Colour
T2	PLF	-10-□□	1N/O	1	R
	MLF	-01-□□	1N/C	2	G
	MRLF	-11-□□	1NO+1NC	3	Y
		-20-□□	2N/O	4	BL
		-02-□□	2N/C	6	W
				12	
				24	

T2-MLF: Metal ring

T2-MRLF: Metal head & Metal ring

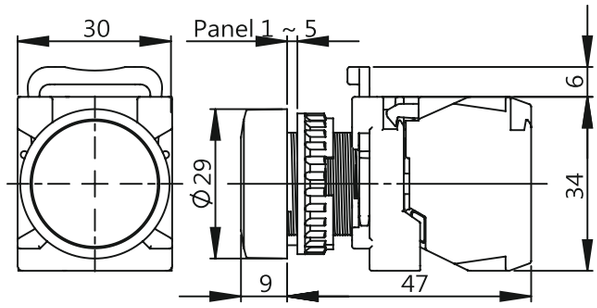

T2-PGF Engineering plastic head Illuminated guard ring push button 保護型照光按鈕



規格型號 Type			接點 Contact	電壓 Voltage	顏色 Colour
T2	PGF	-10-□□	1N/O	1	R
	MGF	-01-□□	1N/C	2	G
	MRGF	-11-□□	1NO+1NC	3	Y
		-20-□□	2N/O	4	BL
		-02-□□	2N/C	6	W
				12	
				24	

T2-MGF: Metal ring

T2-MRGF: Metal head & Metal ring

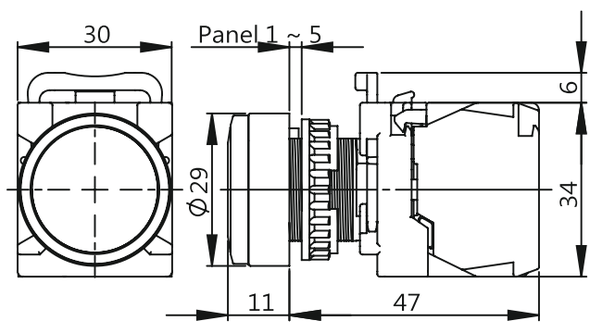

T2-ML Engineering plastic head



Illuminated mushroom head 洋菇頭照光按鈕

規格型號 Type			接點 Contact	電壓 Voltage	顏色 Colour
T2	ML	–10–□□	1N/O	1	R
	MRL	–01–□□	1N/C	2	G
		–11–□□	1NO+1NC	3	Y
		–20–□□	2N/O	4	BL
		–02–□□	2N/C	6	
				12	
				24	

T2-MRL: Metal ring & Metal head

Dimensions 尺寸

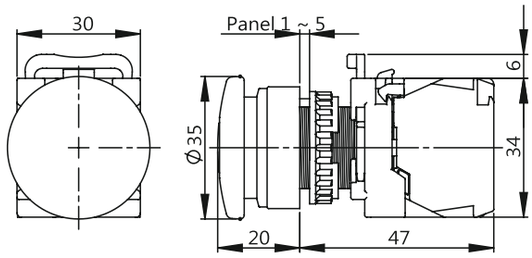

T2-PPFL Engineering plastic head



Illuminated Push ON - Push OFF 交替式照光按鈕

規格型號 Type			接點 Contact	電壓 Voltage	顏色 Colour
T2	PPFL	–10–□□	1N/O	1	R
	MPFL	–01–□□	1N/C	2	G
	MRPFL	–11–□□	1NO+1NC	3	Y
		–20–□□	2N/O	4	BL
		–02–□□	2N/C	6	W
				12	
				24	

T2-MPFL: Metal head

T2-MRPFL: Metal ring & Metal head

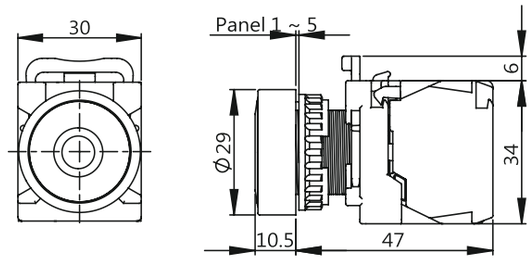

T2-ESL Engineering plastic head



Illuminated emergency stop 洋菇頭照光急停

規格型號 Type			接點 Contact	電壓 Voltage	顏色 Colour
T2	ESL	–10–□□	1N/O	1	R
	RESL	–01–□□	1N/C	2	G
		–11–□□	1NO+1NC	3	Y
		–20–□□	2N/O	4	BL
		–02–□□	2N/C	6	
				12	
				24	

T2-RESL Metal ring

T2-ESL: mushroom head 40mmφ 大洋菇頭

T2-ESLS: mushroom head 35mmφ 小洋菇頭

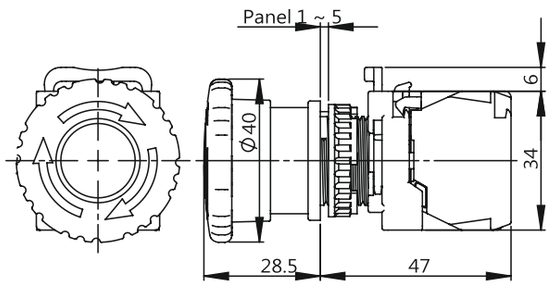

T2-DBFL Flat head



Illuminated double button 雙頭照光式按鈕

規格型號 Type			接點 Contact	電壓 Voltage	顏色 Colour
T2	DBFL	–11–□□	1NO+1NC	1	R
	DBL	–20–□□	2N/O	2	G
		–02–□□	2N/C	3	Y
				4	
				6	
				12	
				24	

T2-DBL: Long & Flat head

