Datasheet

SP22ML
22mm 20A Metal Push Button, 2NO, with Light



Main

Range	Metal Push Button
Function	Momentary, Illuminated Type
Code	SP22ML
Material	304 Stainless Steel
LED Voltage Range	24V, 220V (to be specified)
LED Color	Red, Green, Blue, Yellow, White (to be specified)

Specification

Rated Current	20A
Rated Voltage	250VAC
LED Rated Current	≤20mA
Rated Power	720W(DC) 5000W(AC)
Insulation & Voltage Resistance	3000V
Point Resistance	≤50mΩ
Mechanical Life	200,000
Electrical Life	50,000-80,000 (250V 16A) ; 20,000-30,000 (250V 20A)
Operating Temperature	-25℃~+85℃
Certification	CE
Protection Degree	IP66 IK09
Pin Material	H62 Brass
Light Source	LED

Technical drawings

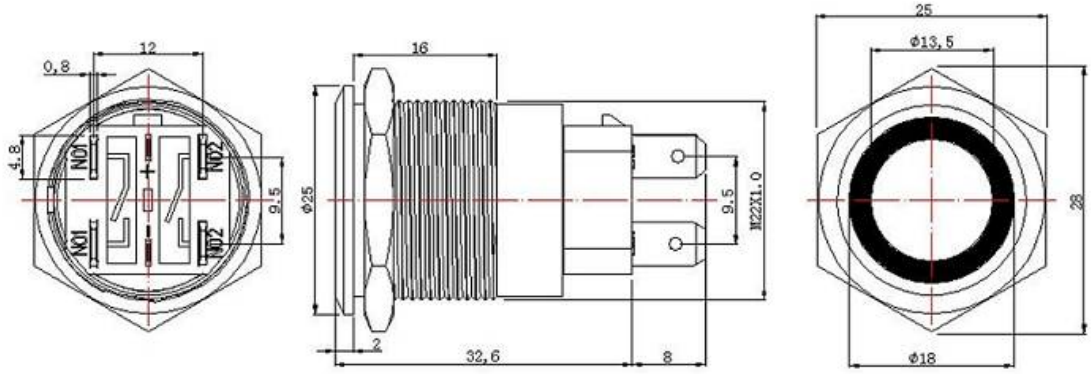

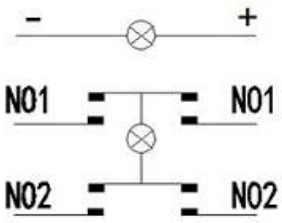

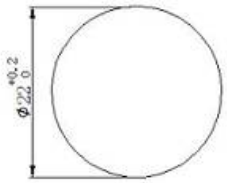

LED Specification

