

Number of buttons	Complete type	Rating	Cable bushing diameter (mm)
2 (1pair)	HS-61	24VAC 5A 120VAC 5A 250VAC 5A 500VAC 5A 24VDC 2A 120VDC 0.4A	8~16Dia
4 (2pair)	HS-62		
6 (3pair)	HS-63		
8 (4pair)	HS-64		

Compact high visibility orange enclosure NEMA 4x enclosure rating Ultra-long service life, -15°C~70°C operation 100g shock resistance Au switch pairs are mechanically interlocked ON-OFF can be substited in tirst two buttons any switch shown

HS-61

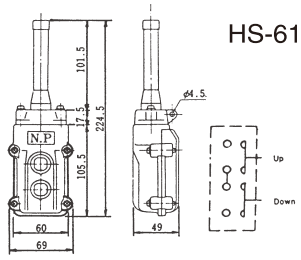

HS-62

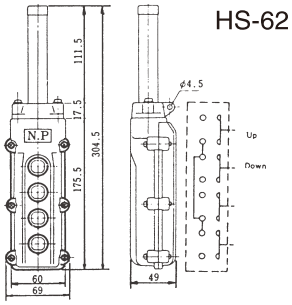

HS-63

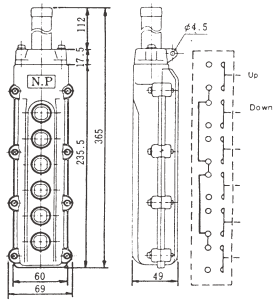

HS-64



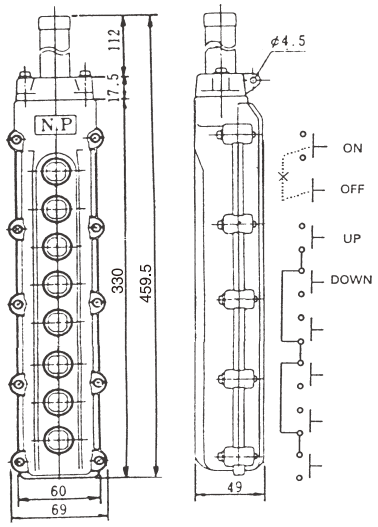

LEGENDS

UP	DOWN	FAST	SLOW	HING	LOW	NORTH	SOUTH
ON	OFF	RIGHT	LEFT	RAISE	LOWER	EAST	WEST
IN	OUT	FWD	REV	START	STOP	OPEN	CLOSE

HS603 - ES



HS605 - ES



Item No.	Specification	Rating
HS603-ES	1 E-stop switch 2 Button(1 pair) 1N/O+1N/O	24 VAC 5A 120 VAC 5A 250 VAC 5A 500 VAC 5A 24 VDC 2A 120 VDC 2A
HS605-ES	1 E-stop switch 4 Button(2 pair) each button 1N/O	
HS607-ES	1 E-stop switch 6 Button(3 pair) each button 1N/O	
Cable bushing diameter:8-16mmø		

Dimensions and Connections of COB213



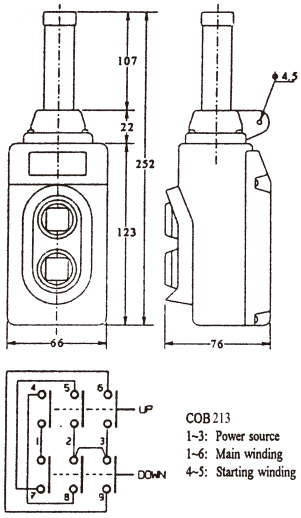

COB213ES



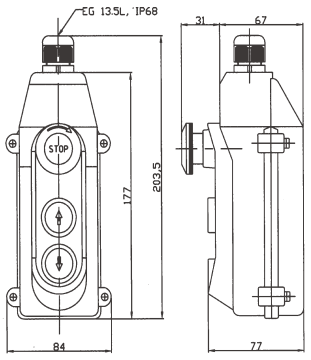

Designed for direct control of single phase electric motors. Since motor current is controlled directly by the pendant switch no extra reversing contactors or costly controls are required.

Features

- Durable high quality A.B.S. Pendant switch housing
- Highly visible safety orange color
- NEMA 4 water-proof enclosure
- Split case design for easy installation and wining
- Flexible cable boot selected to match size of cable prevents entry of foreign debris
- Slim compact size suited for one hand operation
- Control ratings for 1HP max. at 120 VAC
- Two button switch with a wide range of legend markings



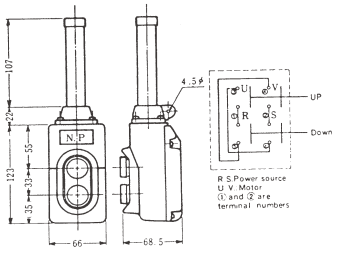

COB21

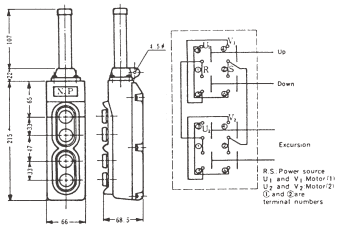

COB22

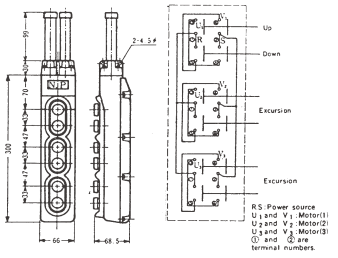

COB23

Legends

UP, DOWN, RAISE, LOWER, EAST,NORTH, SOUTH, U, D, E, W, N, S, R, L, ⬆⬇

Rating : 220VAC, 22KW water proof operation





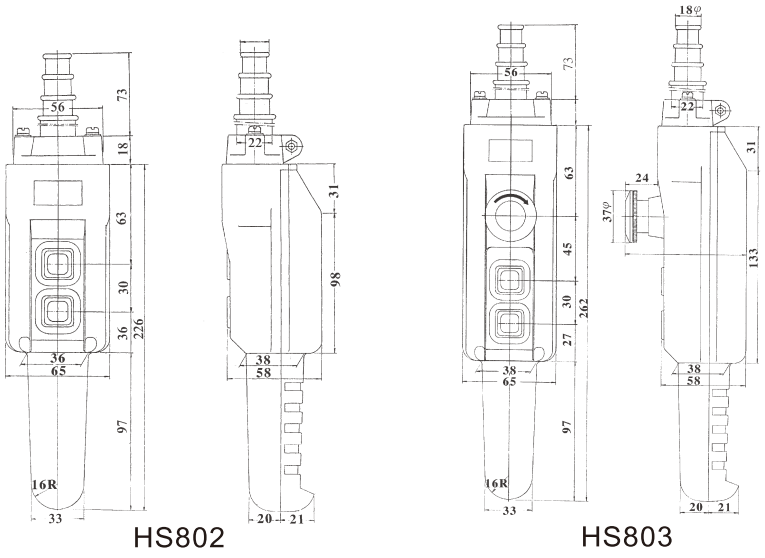

The HS80 Series is a compact,pistol-grip design two-button,three-button with Emergency stop pendant station, and features:

- An especially ergonomic design-less than three inches wide-weighing only 10 ounces
- Construction of high impact ABS,and high visibility safety yellow
- NEMA 4 waterproof rating
- Single-speed 5 amp, 250 volt contact block
- Multi-diameter cable bushing





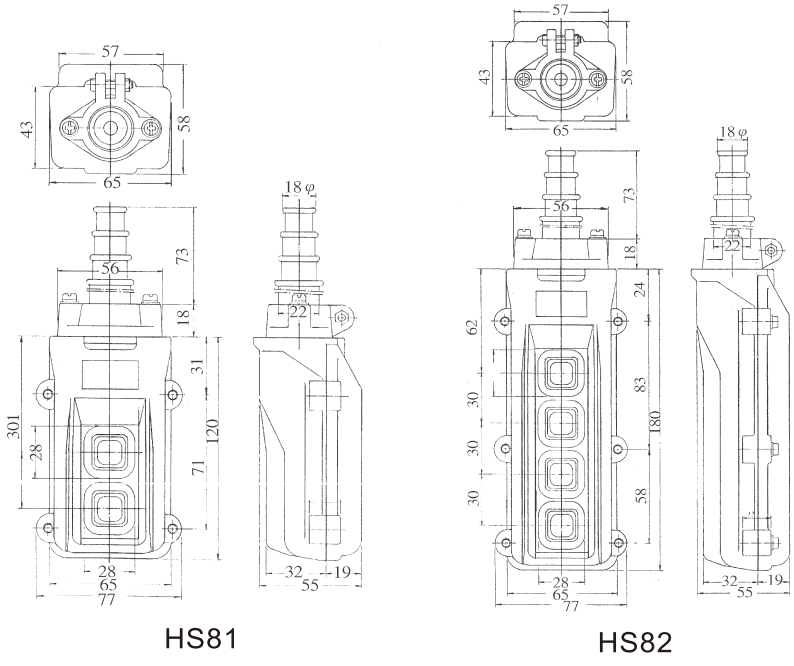





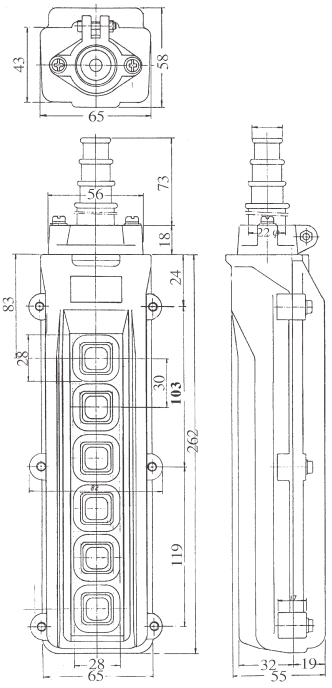

HS83

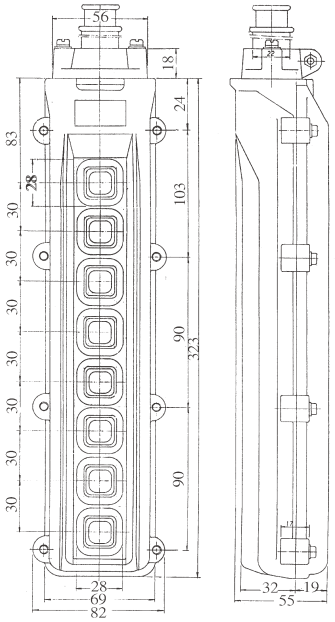

HS84





HS85

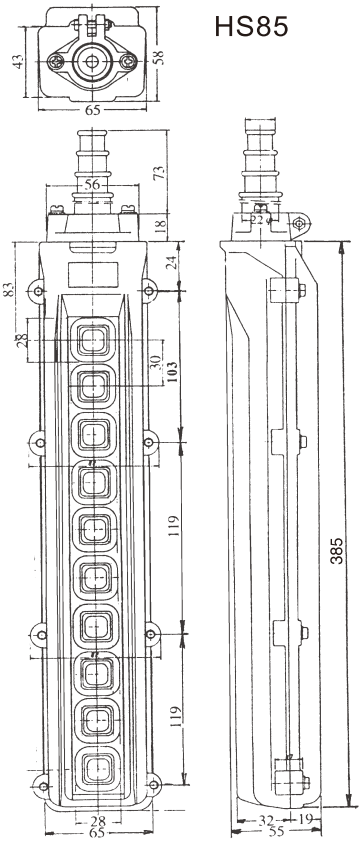

HS86

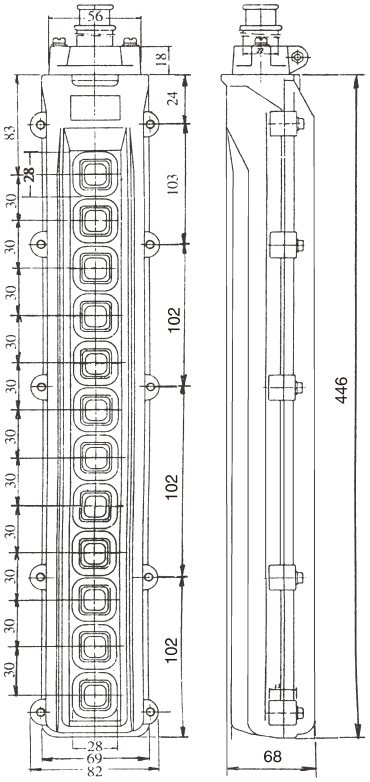



Item No.	
HS803-ES	Emergency stop switch, (Reset) 2 Single Speed UP, Down (↓ · ↑)
HS803-2S	Emergency stop switch, (Reset) 2 Double Speed (↓↓ · ↑↑)
HS805-ES	Emergency stop switch, (Reset) 4 Single Speed UP, Down (↓ · ↑ ← · →)
HS805-2S	Emergency stop switch, (Reset) 4 Double Speed (↓↓ · ↑↑ ⇆ · ⇉)



HS821	Emergency stop switch, (Reset) Illuminated push off -push on switch 2 Single speed UP, Down (↓ · ↑) Deep back
HS822	Emergency stop switch, (Reset) Illuminated push off -push on switch 2 Double speed UP, Down (↓↓ · ↑↑) Deep back



HS831	Emergency stop switch, (Reset) Selector switch 2 position, 1 - 2 4 Single speed
HS832	Emergency stop switch, (Reset) Selector switch 2 position, 1 - 2 4 Double speed
HS833	Emergency stop switch, (Reset) Illuminated push off -push on switch 4 Single speed Deep back
HS834	Emergency stop switch, (Reset) Illuminated push off -push on switch 4 Double speed Deep back



HSD-84S	Single speed ON-OFF, UP DOWN, LEFT RIGHT EAST WEST, (Others Available)
HSD-84D	Two speed ON-OFF, UP DOWN, LEFT RIGHT EAST WEST, (Others Available)

HS841
HS842

HS843
HS844



Item No.	
HS841	Emergency stop switch, (Reset) Selector switch 2 position, 1 - 2 6 Single speed
HS842	Emergency stop switch, (Reset) Selector switch 2 position, 1 - 2 6 Double speed
HS843	Emergency stop switch, (Reset) Pilot lamp 6 Single speed
HS844	Emergency stop switch, (Reset) Pilot lamp 6 Double speed

HS861
HS862

HS851
HS852



HS851	Emergency stop switch, (Reset) Pilot lamp 6 Single speed 2 Double speed
HS852	Emergency stop switch, (Reset) Pilot lamp 4 Single speed 4 Double speed
HS861	Emergency stop switch, (Reset) Selector switch 2 position, 1 - 2 6 Single speed 4 Double speed
HS862	Emergency stop switch, (Reset) Selector switch 2 position, 1 - 2 4 Single speed 6 Double speed

SWITCHES

Type	Appearance	Contact arrangement	Operation
N80B		N80B 10 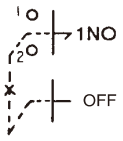 34292 N80B 11 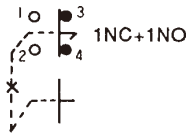 34293	MAINTAINED ON-0FF SUPPLIED WITH RED & GREEN BOOT.
N80C	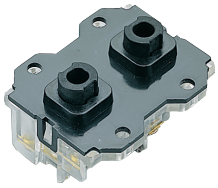	N80C 20 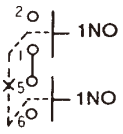 34294 N80C 22 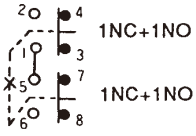 34295	MOMRNTARY SINGLE-SPEED WITH MECHANICAL INTERLOCKING
N80J	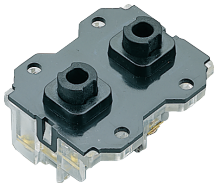	N80J 11 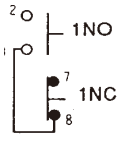 34308 N80J 20 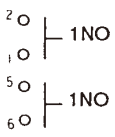 34309 N80J 22 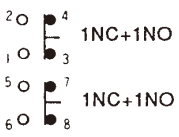 34310	MOMENTARY SINGLE SPEED OR MOMENTARY ON-OFF NON-INTERLOCKED SUPPLIED WITH RED & GREEN BOOT.
N80D		N80D 44 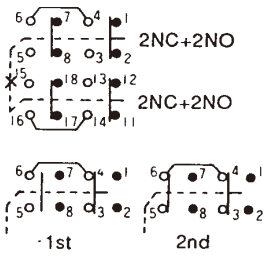 34297 N80D 40 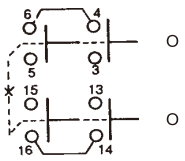 34296	MOMENTARY 2-SPEED WITH MECHANICAL INTERLOCKING
N80T		N80T 44 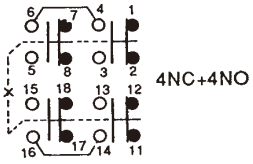 34322	MOMENTARY DUAL POLE MECHANICAL INTERLOCKING
		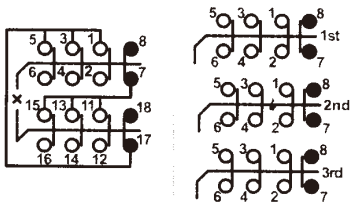 34323	MOMENTARY 3-SPEED WITH MECHANICAL & ELECTRICAL INTERLOCKING

SWITCHES

Emergency stop(E-stop)



Part NO.	Contact
37122	1O (1 N/O)
34313	1C (1 N/C)
37123	1O/C(N/O+N/C)
37125	2/O (2 N/O)
37124	2/C (2 N/C)

Selector switch 3 position



Part NO.	Contact
37110	1O/C(N/O+N/C)
34320	2/O (2 N/O)
34319	2/C (2 N/C)

Selector switch 2 position



Part NO.	Contact
37108	1O (1 N/O)
37107	1C (1 N/C)
34317	1O/C(N/O+N/C)
34318	2/O (2 N/O)
37109	2/C (2 N/C)

Contact



Part NO.	Contact
	1O (1 N/O)
	1C (1 N/C)
	1O/C(N/O+N/C)
	2/O (2 N/O)
	2/C (2 N/C)

Alternating switch

10A 125VAC. 6A250VAC



Part NO.	Contact
34299	1O (1 N/O)
34300	1O/C(N/O+N/C)
37126	2/O (2 N/O)

Toqqle switch

10A 250VAC

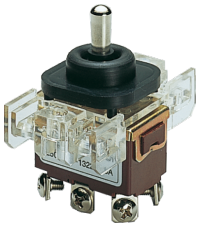

Part NO.		Contact
1021	2 Pole	ON - OFF
1121	3 Pole	ON - ON
1122	3 Pole	ON - OFF - ON
1221	4 Pole	ON - OFF
1321	6 Pole	ON - ON
1322	6 Pole	ON - OFF - ON

Emergency stop

6A 120VAC
3A 240VAC



Part NO.	Contact
LMS-22	1/C (N/C)
LMS-22	1O/C (N/O+N/C)

Emergency stop

6A 120VAC
3A 240VAC



Part NO.	Contact
LEB-22	1/C (N/C)
LEB-22	1O/C (N/O+N/C)

Emergency stop

6A 120VAC
3A 240VAC



Part NO.	Contact
LMB22-1/C	(N/C)
LMB22-1O/C	(N/O+N/C)

Key switch

6A 120VAC. 3A240VAC



Part NO.	Contact
KS22-1O/C 2 position	(N/O+N/C)
KS22-2/O	(2 N/O)

Selector switch

6A 120VAC. 3A240VAC



Part NO.	Contact
CS22-1/O	(N/O)
CS22-1O/C	(N/O+N/C)
CS22-2/O	(2 N/O)

SWITCHES

HS-61P Pistol grip Pendant



- Ergonomic comfort design
- Single speed 5A, 125V contact block
- Made of high impact ABS resin
- Highly visible safety yellow enclosure
- Waterproof NEMA 4 rating -indoor use only
- Internal and external atrain relief
- Variable dia cable bushing inlet with clamp
- Standard UP/Down (Others Available)

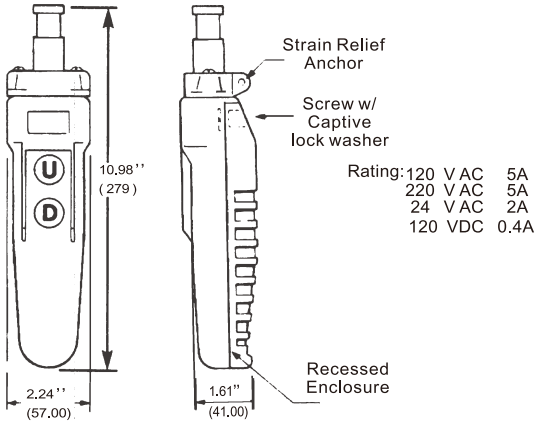



Rating: 120VAC. 220VAC 5A
24 VDC 2A
120VDC 0.4A

Part No. HS 5M-2P UP. DOWN (↑ · ↓)
2 magnet on the back of the switch housing
15ft. (4.5 M.) or 20ft. (6M) long SJT 18AWG
3core cable.

Part No. HS 5M-3P UP. DOWN (↑ · ↓)
2 magnet on the back of the switch housing
15ft. (4.5 M.) or 20ft. (6M) long SJT 18AWG
4core cable.

Push button switch for horn mounting hole 12 ϕ



Part NO.	Contact
34312	1/O (N/O) 125V 3A 250V 1.5A

Single button



Part NO.	Contact
34306	1 O (1 N/O)
34305	1 C (1 N/C)
34307	1 O/C (N/O+N/C)
37199	2/O (2 N/O)
37114	2/C (2 N/C)
39868	2 O/C(2N/O+2N/C)

Variable position resistor



Part NO.	OHM
34314B	1K
34314D	2K
34314	5K
34314C	10K

Pilot light housing (one button space)



Part NO.	Contact
35181	12V DC
36042	24V DC
34303	110V AC
37581	220V AC

Pilot light mounting hole 10mm ϕ



Part NO.	Contact
36088	12V DC
36081	24V DC
34316	110V AC
36083	220V AC

Pilot light mounting hole 8mm ϕ



Part NO.	Contact
36087	12V DC
34315	24V DC
35293	110V AC
36082	220V AC







PART NO.	CABLE GLAND SIZE	STYLE	CABLE BUSHING SIZE	BUSHING COLLARS
34411	7.5mm DIA. ~ 10.5mm DIA.	C1	7.5mm DIA. ~ 13.5mm DIA.	CABLE O.D. 7.5 ~ 19.5 mm
34412	10.3mm DIA. ~ 13.5mm DIA.			
34413	13.3mm DIA. ~ 16.5mm DIA.	C2	13.3mm DIA. ~ 19.5mm DIA.	
34414	16.3mm DIA. ~ 19.5mm DIA.			
34415	19.3mm DIA. ~ 22.5mm DIA.	C3	19.3mm DIA. ~ 25.5mm DIA.	CABLE O.D. 19.3 ~ 28.5 mm
34416	22.3mm DIA. ~ 25.5mm DIA.			
34417	25.3mm DIA. ~ 28.5mm DIA.	C4	25.3mm DIA. ~ 28.5mm DIA.	
39825	13.3mm DIA. ~ 16.5mm DIA.	C23	13.3mm DIA. ~ 25.5mm DIA.	CABLE O.D. 13.3 ~ 25.5 mm
39826	16.3mm DIA. ~ 19.5mm DIA.			
303C18		C18	14 mm DIA. ~ 18.4 mm DIA.	

Jumpers

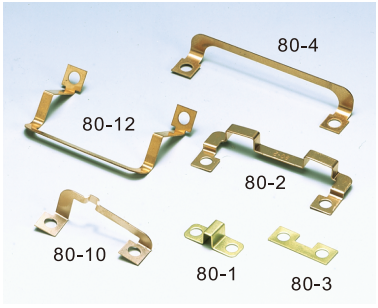

PART NO.	STYLE	
34759	80-1	Internal use on 34294 & 34295 to connect 1 and 5
34760	80-2	Used to connect common between 1-speed. 2-speed. 3-speed on-off switches
34761	80-3	Internal use on all 2-speed switches to connect terminals 6 to 4 and 14 to 16
35538	80-4	External usa on 3-speed sw. to connect termal 18 of two adjacent 3-speed sw. Also use to connect terminal 8 of two adjacent 3-speed sw.
35540	80-10	
34992	80-12	Internal use on 2-speed sw. to connect 5 to 15

Blank plate
Part No. 34304
Blind rubber gasket with metal plate



Legend sheet

Button legend

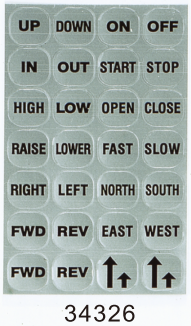

34326

Selector sw legend sheet

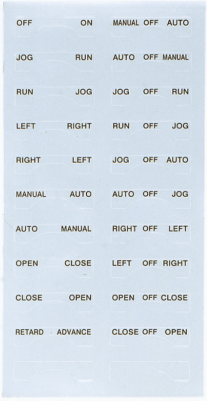

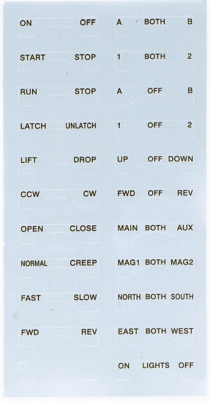

37228