International Certifications E474136

UL 60947-4-1 and CSA C22.2 60947-4-1-14 Low-voltage Switch gear and control gear-part4-1: Contactors and motor-starters, Electromechanical Contactors and motor-starters.
Electrical ratings:

Model	General Purpose		HP rating				Max.short current	Max. voltage	Maximum Fuse Size
			Single Phase 2 pole		Three Phase 3 pole				
	Voltage V AC	Current A	110-120V	220-240V	220-240V	440-480V			
VS, AS ,A PS, R, C series	600	20	1.0	2.0	3.0	5.0	5KA	480V AC	35A
A, PS series	600	40	3.0	5.0	7.5	10.0	5KA	480V AC	75A
A & PS series	600	80	5.0	10.0	15.0	30.0	5KA	480V AC	125A
A series	600	120A	5.0	10.0	20.0	30.0	5KA	480V AC	125A

CSA Certified 186663

Applicable Requirements
CAN/CSA-C22.2 No. 0-M91-General Requirements-Canadian Electrical Code, PART II
CAN/CSA-C22.2 No. 14-05-Industrial Control Equipment
UL Standard No. 508, 17th-Industrial Control Equipment
CSA Std C22.2 No. 65-93-Wire Connectors

Rating: 20A, 25A, 40A, 80A

Model No.	General Purpose		HP rating			
			Single Phase / 2 pole		Three Phase / 3 pole	
	Voltage (V)	Current (A)	110-120V	220-240V	220-240V	440-480V
PART A: AX1Y1, PSX1Y1, VSX1Y1, ASX1Y1 Series	600	20	1.0	2.0	3.0	5.0
PART B: CY4 PSX2Y2 Series	600	25	1.0	2.0	3.0	5.0
PART C: A3Y3 PSX3Y3 Series	600	40	3.0	5.0	7.5	10.0
PART D: A6Y3 Series	600	80	5.0	10.0	15.0	30.0

TUV Rheinland Group

License No. R50062176
EN 60947-1: 2004
EN 60947-3: 1999+A1
EN 60947-4-1: 2001+A1
EN 60947-5-1: 2004

Rating: 20A, 25A, 40A, 63A, 80A

Series		A2Y1 PS2Y2 R2Y3	CY4	A3Y1	A4Y1	A6Y1
Rated frequency	Hz	50/60				
Thermal current Ith	A	20	25	40	63	80
Utilization category AC-1 (EN 60947-4-1)	-	16A, 660V	20A, 660V	32A, 660V	40A, 660V	63A, 660V
Utilization category AC-21A (EN 60947-3)	-	16A, 600V	20A, 600V	25A, 600V	32A, 600V	40A, 600V
Utilization category AC-22A (EN 60947-3)	-	16A, 600V	20A, 600V	32A, 600V	40A, 600V	63A, 600V
Utilization category AC-12 (EN 60947-5-1)	-	6A, 240V 4A, 440V	6A, 240V 4A, 440V	14A, 240V 6A, 440V	16A, 240V 7A, 440V	--
Rated short-time withstand current Icw	A	250	350	1000	1000	1000
Rated short-time making capacity Icm	KA	None				
Rated conditional short circuit current	KA	1	1	10	10	10
Kind of SCPD	-	Fuse (gL/gG)	Fuse (gL/gG)	Fuse (gL/gG)	Fuse (gL/gG)	Fuse (gL/gG)
Rating of SCPD	A	20A	25A	40A	65A	80A
Insulation Voltage Ui	V	690				
Impulse withstand Voltage Uimp	V	N				

Certifications

Test specification

Standard: IEC 60947-3: 2008, AMD1: 2012, AMD2015 in conjunction
with IEC60947-1: 2007, AMD1: 2010, AMD2: 2014
Test procedure: CB Scheme, single phase and three phase, 50/60Hz

* CB scheme for cam switch rated 20A
  Ue: 690VAC, 50/60Hz, Ie: 20A Uimp: 6KV
  Uc: AC21A, AC22A, AC23A Short-circuit current: 1KA
* CB scheme for cam switch rated 40A
  Ue: 690VAC, 50/60Hz, Ie: 40A Uimp: 6KV
  Uc: AC21A, AC22A, AC23A Short-circuit current: 3KA
* CB scheme for cam switch rated 80A
  Ue: 690VAC, 50/60Hz, Ie: 80A Uimp: 6KV
  Uc: AC21A, AC22A, AC23A Short-circuit current: 5KA
* CB scheme for cam switch rated 100A
  Ue: 690VAC, 50/60Hz, Ie: 100A Uimp: 6KV
  Uc: AC21A, AC22A, AC23A Short-circuit current: 3KA

MOUNTING DIMENSIONS FOR TYPE A1, A2, A3

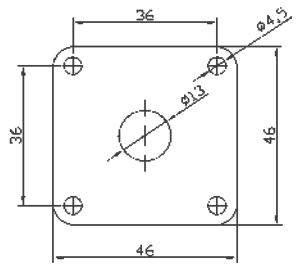

A1

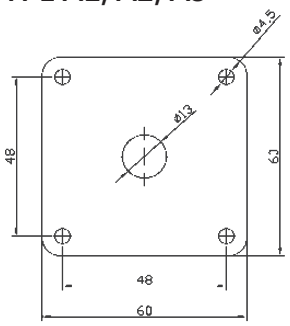

A2

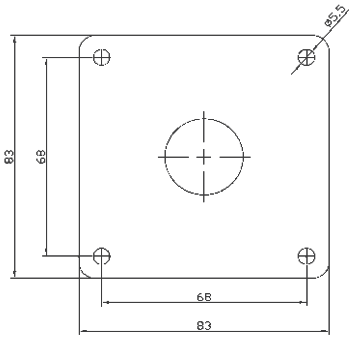

A3

FRAME DIMENSIONS

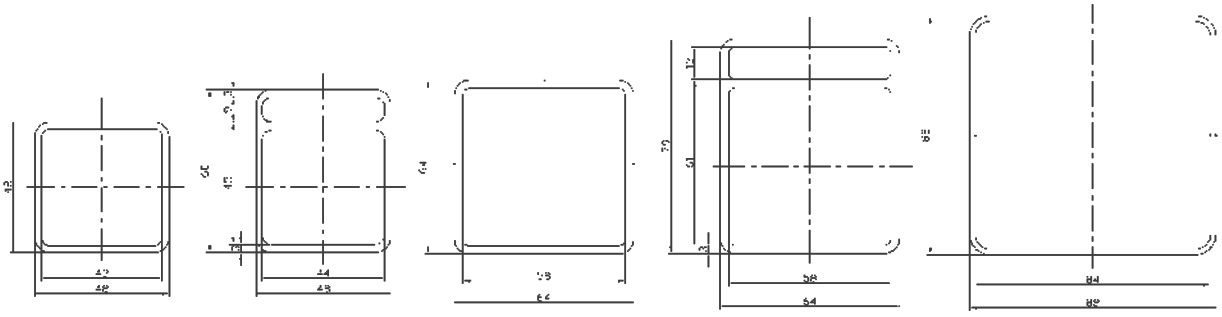

F1 F2 F3 F4 F5

Dimensions for A2, PS2, R2, switches (20A)

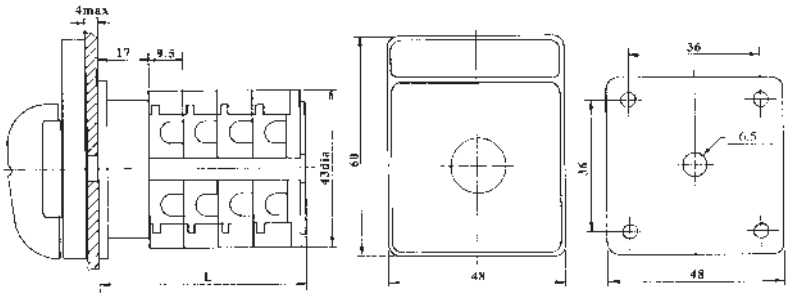

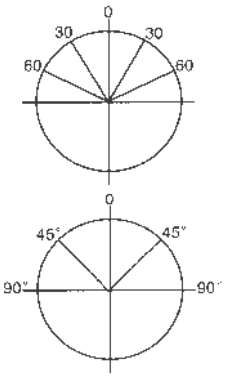



Total Number of stage	1	2	3	4	5	6	7	8
Length L	31.5	41	50.5	60	69.5	79	88.5	98

Dimensions for C series switches (20A, 25A)

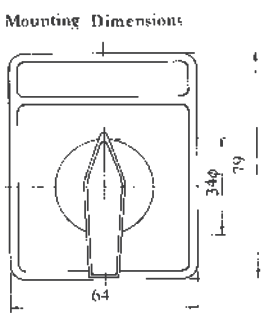

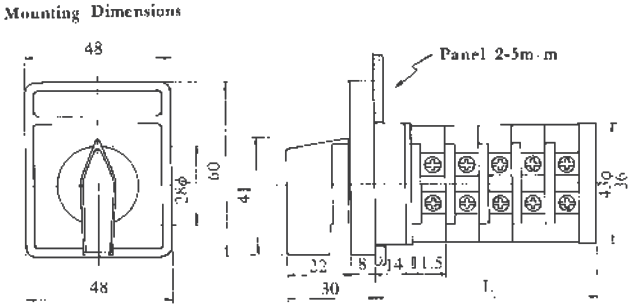



Total Number of stage	1	2	3	4	5	6	7	8	9	10
Length L	37	48 5	60	71 5	83	94 5	106	117 5	129	140 5

Dimensions for A40(40A), PS series 40A

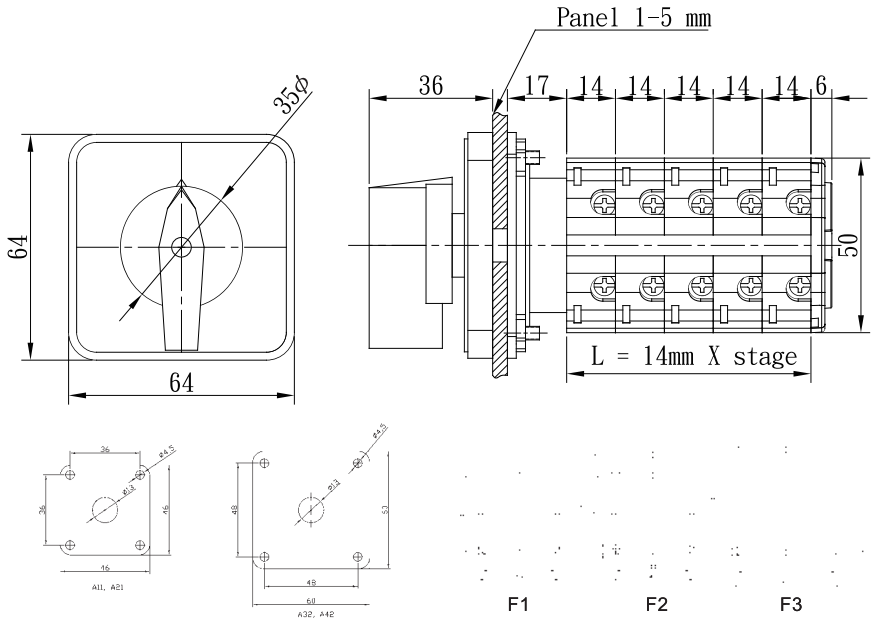



Dimensions for A80(80A) switches code No. A601~A624, PS61~PS64

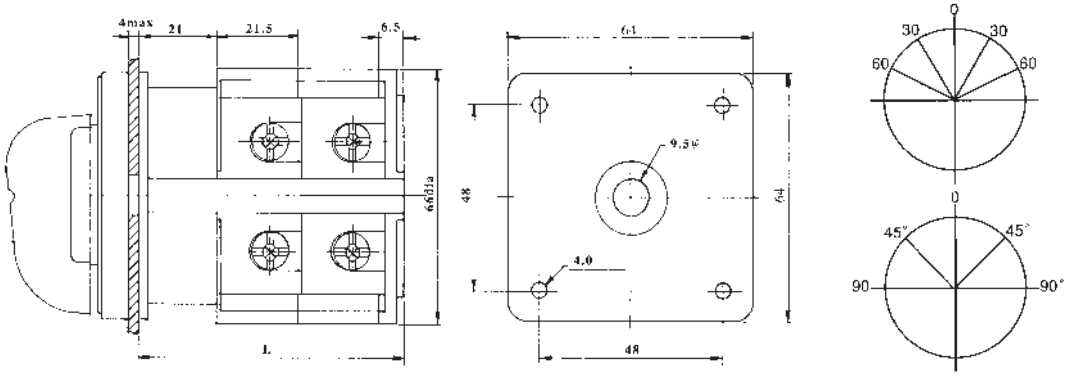

Total Number of stage	1	2	3	4	5	6
Length L	49	70.5	92	113.5	135	156.5



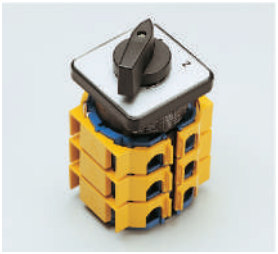

yellow safety cover

Mounting dimensions for 120A switches

Panel mounting type A3

Frame type F5

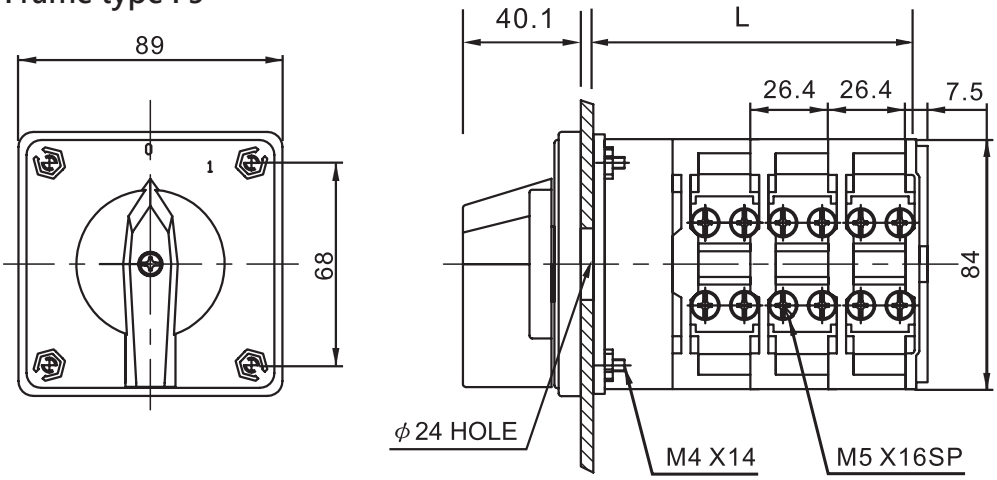



Total Number of stage	1	2	3	4	
Length L	61	87	113	140	

A20(20A) Face plate 48×48mm, 64×64mm



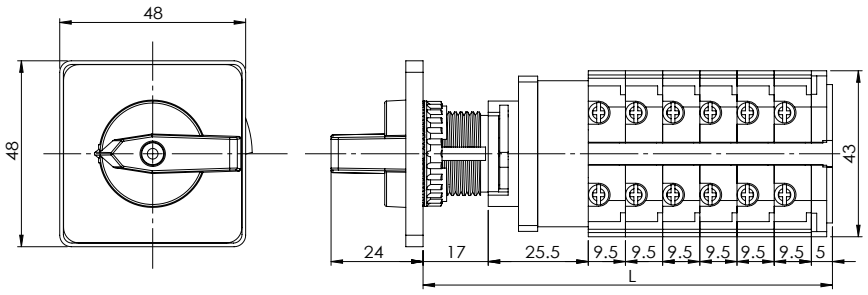

Total No. of stage	1	2	3	4	5	6	7	8	9	10
Length L	57	66.5	76	85.5	95	104.5	114	123.5	133	142.5

A40(40A) Face plate 48×48mm, 64×64mm



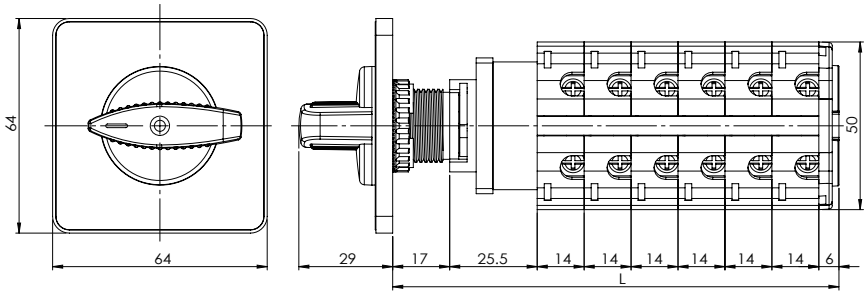

Total No. of stage	1	2	3	4	5	6	7	8
Length L	62	76	90	104	118	132	146	160

A80(80A) Face plate 64×64mm



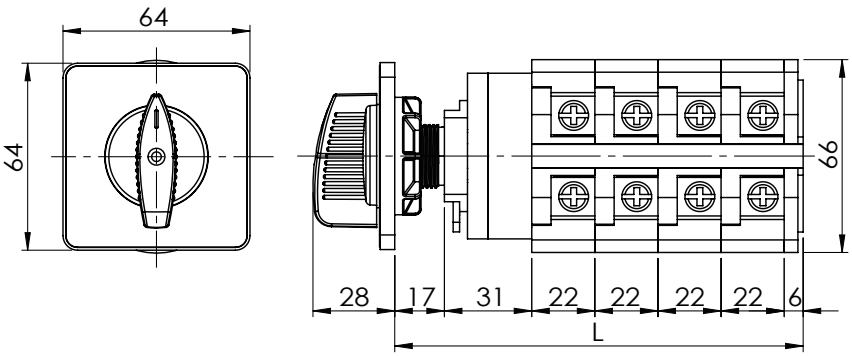

Total No. of stage	1	2	3	4	5
Length L	74	96	118	140	162

Keylock Device, 22mmØ, 30mmØ

Single hole mount: Face plate 48×48mm
for A20(20A), A40(40A)



A20(20A)



A40(40A)

Single hole mounting hole dia.

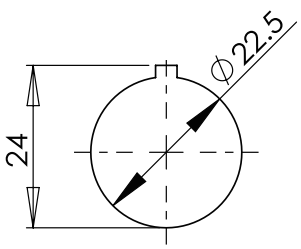

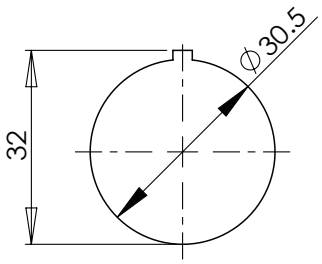

Code	Dimension	Type
K1	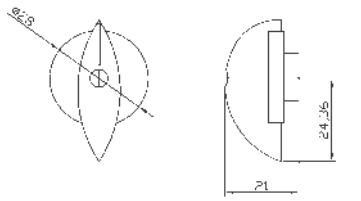	
K2	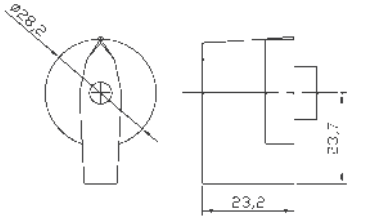	
K3	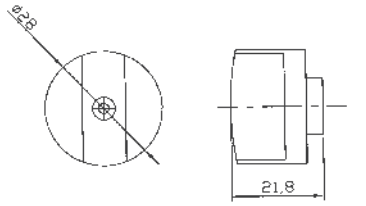	
K4	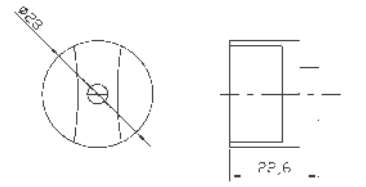	
K5	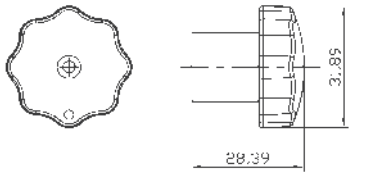	
K6	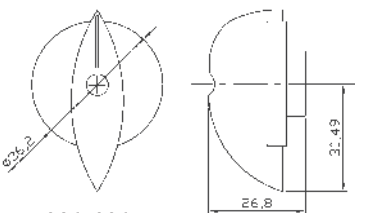 32A,63A	
K7	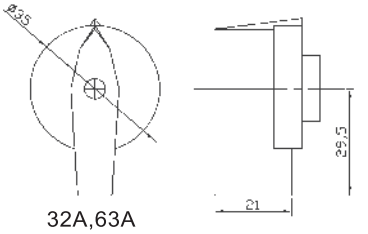 32A,63A	

Code	Dimension	Type
K8	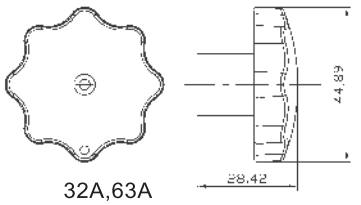 32A,63A	
K9	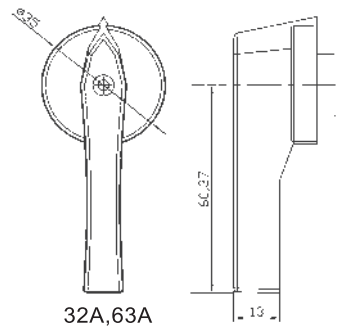 32A,63A	
K10	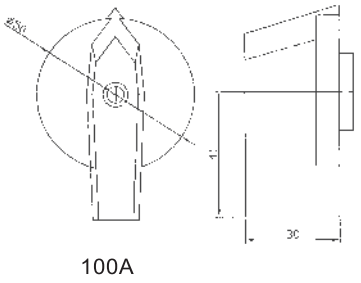 100A	
K11	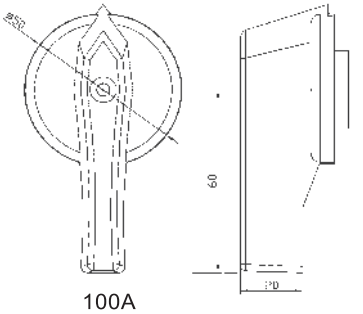 100A	
K12	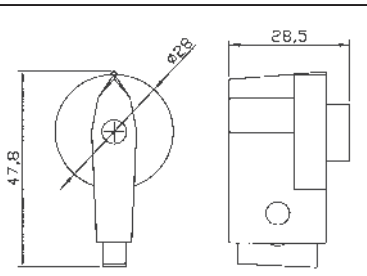	
K13	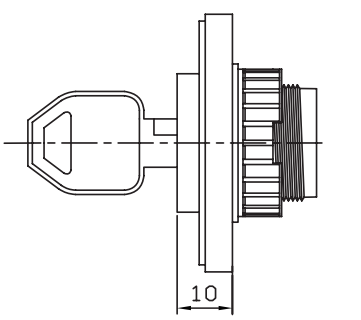	

Code	Dimension	Type	Code	Dimension	Type
K14	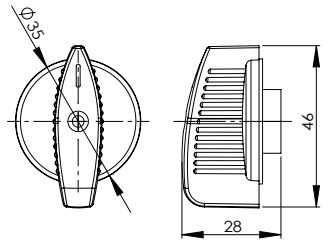				
K15	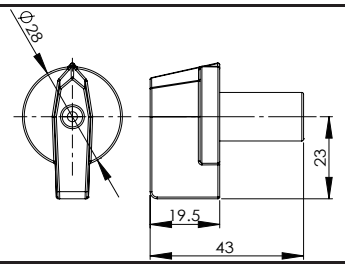				
K16	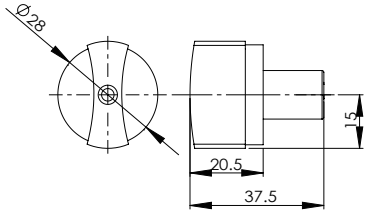				

Mounting type A1, A2, A3

A20	A1	F1	A201	P1	K2

Type of switches	mounting type	Type of Frame	Code No. contact arrangement & Function	Type of Escutcheon plate code No.	Type of Handle
A20 (20A) A25 (25A) A40 (40A)	A1 (36×36) A2 (48×48)	F1 (48×48) F2 (48×60) F3 (64×64)	VS33,VS34,AS33, AS34 A201~A206A, A207~A224 R201~R216 C001~C180 A401~A4180 PS21~PS26, PS41~PS46	V1, V2, V3, V4, V5, V6 A7~A11 P1~P64	K1, K2, K3, K4 K5, K6, K7, K8 K9, K12 K14, K15, K16
A80 (80A)	A2 (48×48)	F3 (64×64)	A601~A604A, A607~A616 A617~A624, PS61~PS68 A8202~A8206, A821~A822	P1~P22	K6, K7, K8, K9 K14
A120 (120A)	A3 (68×68)	F5 (88×88)	A1001~A1004A A1007~A1024	P101, P102, P103, P104	K10, K11

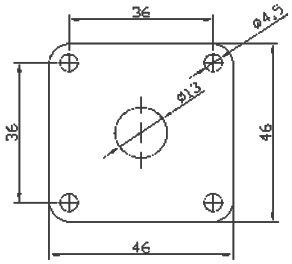

A1

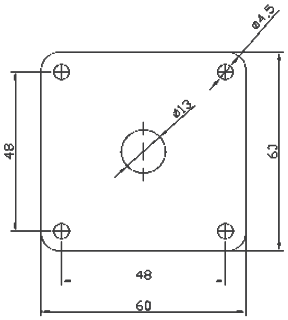

A2

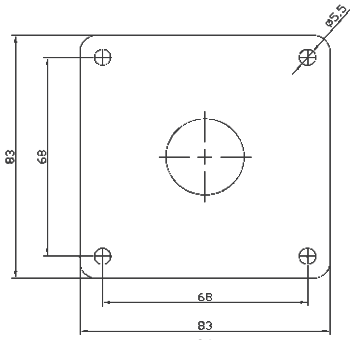

A3

How to order 22mmØ Single hole mounting

A20	22	F1	A201	P1	K15

Type of switches	mounting type	Type of Frame	Code No. contact arrangement & Function	Type of Escutcheon plate code No.	Type of Handle
A20 (20A) A25 (25A) A40 (40A)	22 22mmØ	F1 (48×48)	VS33,VS34,AS33, AS34 A201~A206A, A207~A224 R201~R216 C001~C180 A401~A4180 PS221~PS226 PS241~PS246	V1~V3, V4~V6 A7~A11 P1~P64	K15
		F2 (48×60)			K15
		F3 (64×64)			K6, K7, K8, K9 K14
A80 (80A)		F3 (64×64)	A601~A604A, A607~A616 A617~A624 PS261~PS268	P1~P22	K6, K7, K8, K9 K14



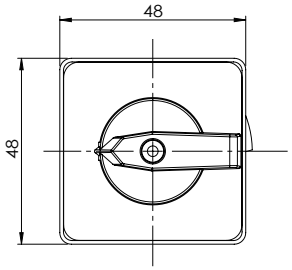

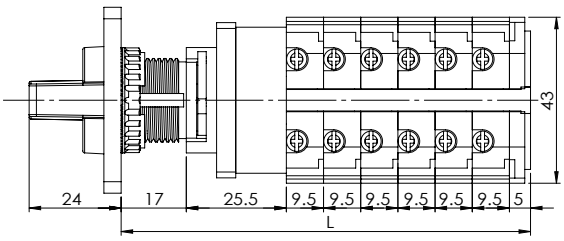

ON-OFF switches 45°, 60°, 90°, switching 20A

Code No	Function	Stage	Escutch plate	Connecting Diagram
A201	1 Pole	1	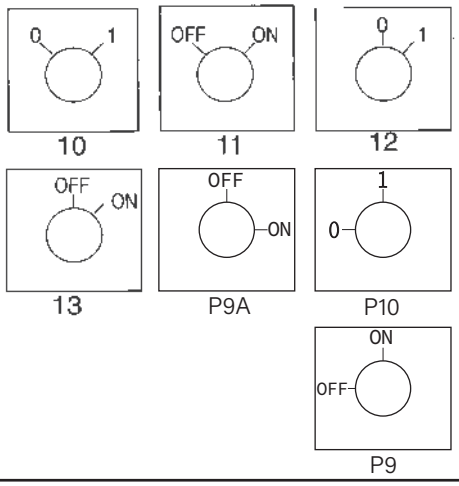	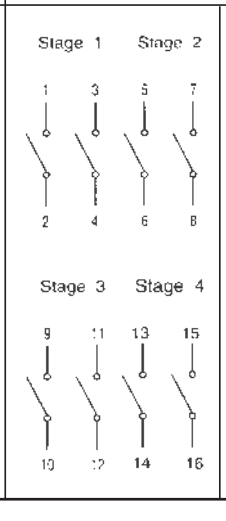  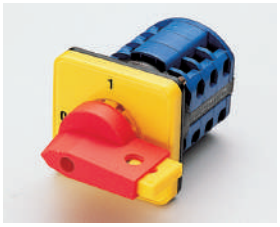
A201A	2 Pole	1		
A202	3 Pole	2		
A202A	4 Pole	2		
A203	5 Pole	3		
A203A	6 Pole	3		
A204	7 Pole	4		
A204A	8 Pole	4		
A205	9 Pole	5		
A205A	10 Pole	5		
A206	11 Pole	6		
A206A	12 Pole	6		

Change over switches without OFF 90°, 60°, 45°, 30°, switching 20A (Made before Break)

A207	1 Pole	1	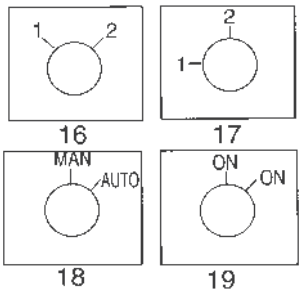	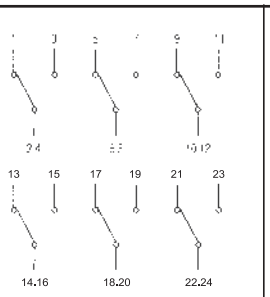	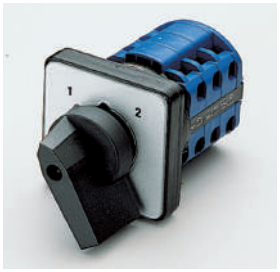
A208	2 Pole	2			
A209	3 Pole	3			
A210	4 Pole	4			
A211	5 Pole	5			
A212	6 Pole	6			

Change over switches without OFF with electrically isolated contacts 20A

A213	1 Pole	1	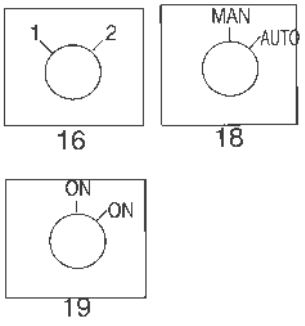	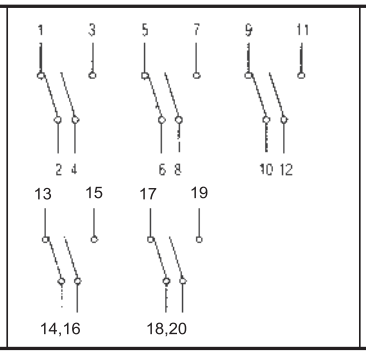	
A214	2 Pole	2			
A215	3 Pole	3			
A216	4 Pole	4			

Change over switches with center OFF 60°, 45°, 90° switching 20A

A217	1 Pole	1	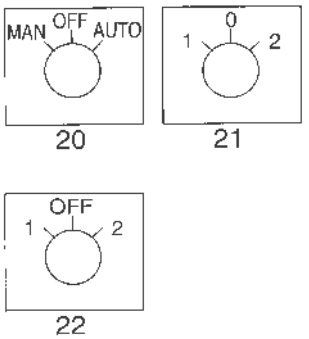	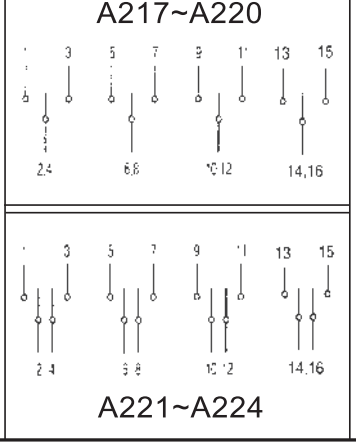	
A218	2 Pole	2			
A219	3 Pole	3			
A220	4 Pole	4			
A221	1 Pole	1			
A222	2 Pole	2			
A223	3 Pole	3			
A224	4 Pole	4			

ON-OFF Power switches 90° 20A

Code No	Function	Stage	Escutch Plate	Connecting Diagram	
PS21	1 Pole	1	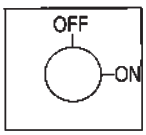	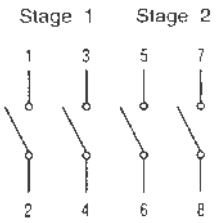	
PS22	2 Pole	1			
PS23	3 Pole	2			
PS24	4 Pole	2			
PS25	5 Pole	3			
PS26	6 Pole	3			

ON-OFF switches spring return to centre 20A

R201	1 Pole	1	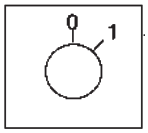 23	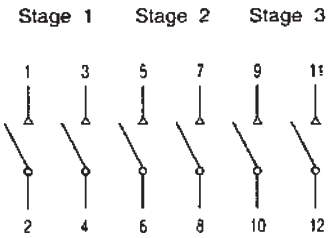	
R201A	2 Pole	1			
R202	3 Pole	2			
R202A	4 Pole	2	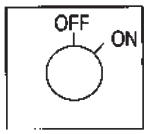 24		
R203	5 Pole	3			
R203A	6 Pole	3			

Change - over switches with spring return 20A

R205	1 Pole	1	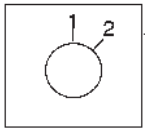 25	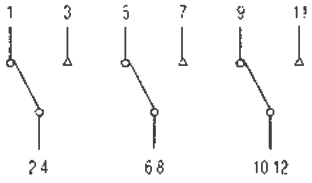	
R206	2 Pole	2			
R207	3 Pole	3			
R208	1 Pole	1		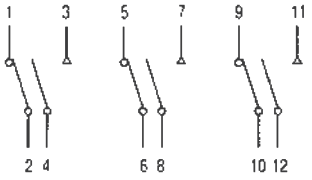	
R209	2 Pole	2			
R210	3 Pole	3			

Change - over switches with spring return to centre 20A

R211	1 Pole	1	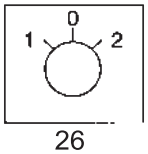 26	R211~R213 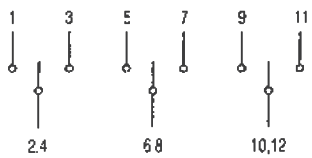	
R212	2 Pole	2			
R213	3 Pole	3			
R214	1 Pole	1	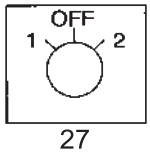 27	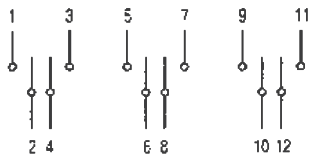	
R215	2 Pole	2			
R216	3 Pole	3		R214~R216	