International Certifications E474136

UL 60947-4-1 and CSA C22.2 60947-4-1-14 Low-voltage Switch gear and control gear-part4-1: Contactors and motor-starters, Electromechanical Contactors and motor-starters.
Electrical ratings:

Model	General Purpose		HP rating				Max.short current	Max. voltage	Maximum Fuse Size
			Single Phase 2 pole		Three Phase 3 pole				
	Voltage V AC	Current A	110-120V	220-240V	220-240V	440-480V			
VS, AS ,A PS, R, C series	600	20	1.0	2.0	3.0	5.0	5KA	480V AC	35A
A, PS series	600	40	3.0	5.0	7.5	10.0	5KA	480V AC	75A
A & PS series	600	80	5.0	10.0	15.0	30.0	5KA	480V AC	125A
A series	600	120A	5.0	10.0	20.0	30.0	5KA	480V AC	125A

CSA Certified 186663

Applicable Requirements
CAN/CSA-C22.2 No. 0-M91-General Requirements-Canadian Electrical Code, PART II
CAN/CSA-C22.2 No. 14-05-Industrial Control Equipment
UL Standard No. 508, 17th-Industrial Control Equipment
CSA Std C22.2 No. 65-93-Wire Connectors

Rating: 20A, 25A, 40A, 80A

Model No.	General Purpose		HP rating			
			Single Phase / 2 pole		Three Phase / 3 pole	
	Voltage (V)	Current (A)	110-120V	220-240V	220-240V	440-480V
PART A: AX1Y1, PSX1Y1, VSX1Y1, ASX1Y1 Series	600	20	1.0	2.0	3.0	5.0
PART B: CY4 PSX2Y2 Series	600	25	1.0	2.0	3.0	5.0
PART C: A3Y3 PSX3Y3 Series	600	40	3.0	5.0	7.5	10.0
PART D: A6Y3 Series	600	80	5.0	10.0	15.0	30.0

TUV Rheinland Group

License No. R50062176
EN 60947-1: 2004
EN 60947-3: 1999+A1
EN 60947-4-1: 2001+A1
EN 60947-5-1: 2004

Rating: 20A, 25A, 40A, 63A, 80A

Series		A2Y1 PS2Y2 R2Y3	CY4	A3Y1	A4Y1	A6Y1
Rated frequency	Hz	50/60				
Thermal current Ith	A	20	25	40	63	80
Utilization category AC-1 (EN 60947-4-1)	-	16A, 660V	20A, 660V	32A, 660V	40A, 660V	63A, 660V
Utilization category AC-21A (EN 60947-3)	-	16A, 600V	20A, 600V	25A, 600V	32A, 600V	40A, 600V
Utilization category AC-22A (EN 60947-3)	-	16A, 600V	20A, 600V	32A, 600V	40A, 600V	63A, 600V
Utilization category AC-12 (EN 60947-5-1)	-	6A, 240V 4A, 440V	6A, 240V 4A, 440V	14A, 240V 6A, 440V	16A, 240V 7A, 440V	--
Rated short-time withstand current Icw	A	250	350	1000	1000	1000
Rated short-time making capacity Icm	KA	None				
Rated conditional short circuit current	KA	1	1	10	10	10
Kind of SCPD	-	Fuse (gL/gG)	Fuse (gL/gG)	Fuse (gL/gG)	Fuse (gL/gG)	Fuse (gL/gG)
Rating of SCPD	A	20A	25A	40A	65A	80A
Insulation Voltage Ui	V	690				
Impulse withstand Voltage Uimp	V	N				

Certifications

Test specification

Standard: IEC 60947-3: 2008, AMD1: 2012, AMD2015 in conjunction
with IEC60947-1: 2007, AMD1: 2010, AMD2: 2014
Test procedure: CB Scheme, single phase and three phase, 50/60Hz

* CB scheme for cam switch rated 20A
  Ue: 690VAC, 50/60Hz, Ie: 20A Uimp: 6KV
  Uc: AC21A, AC22A, AC23A Short-circuit current: 1KA
* CB scheme for cam switch rated 40A
  Ue: 690VAC, 50/60Hz, Ie: 40A Uimp: 6KV
  Uc: AC21A, AC22A, AC23A Short-circuit current: 3KA
* CB scheme for cam switch rated 80A
  Ue: 690VAC, 50/60Hz, Ie: 80A Uimp: 6KV
  Uc: AC21A, AC22A, AC23A Short-circuit current: 5KA
* CB scheme for cam switch rated 100A
  Ue: 690VAC, 50/60Hz, Ie: 100A Uimp: 6KV
  Uc: AC21A, AC22A, AC23A Short-circuit current: 3KA

MOUNTING DIMENSIONS FOR TYPE A1, A2, A3

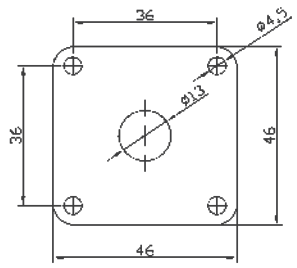

A1

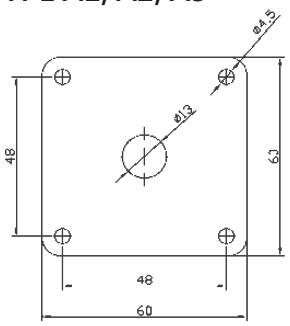

A2

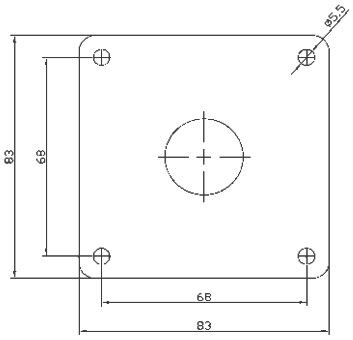

A3

FRAME DIMENSIONS

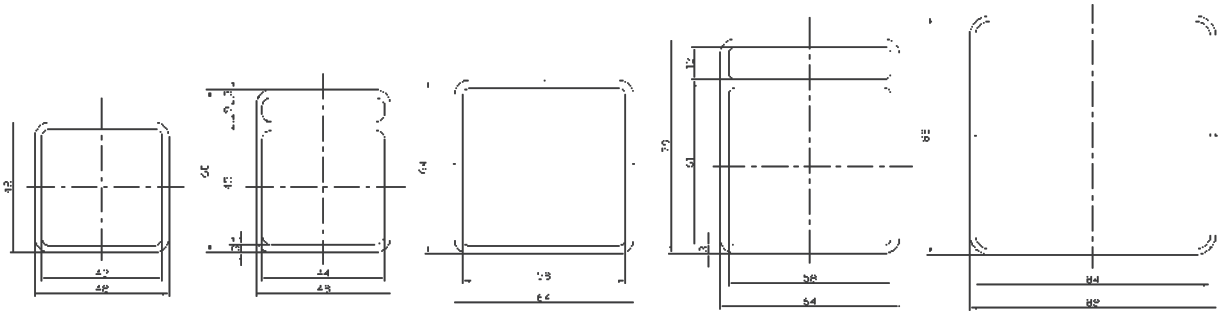

F1 F2 F3 F4 F5

Dimensions for A2, PS2, R2, switches (20A)

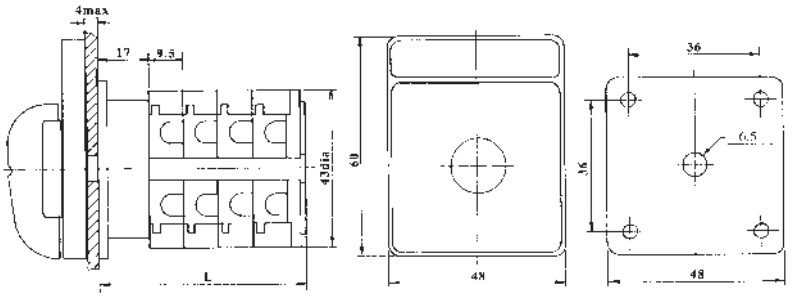

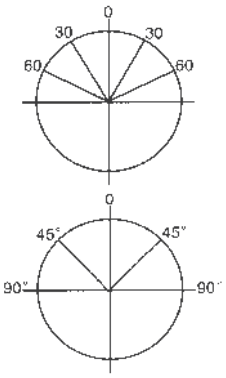



Total Number of stage	1	2	3	4	5	6	7	8
Length L	31.5	41	50.5	60	69.5	79	88.5	98

Dimensions for C series switches (20A, 25A)

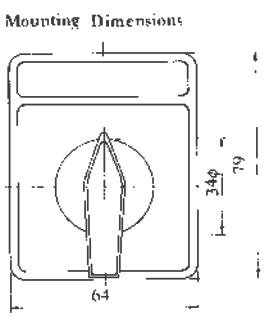

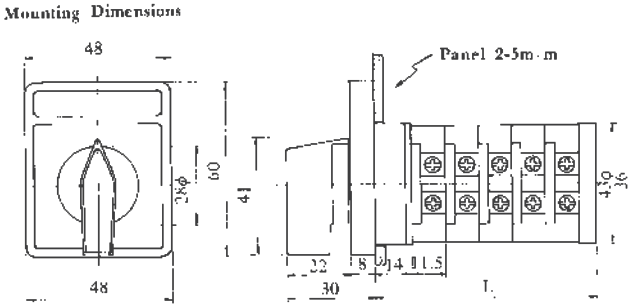



Total Number of stage	1	2	3	4	5	6	7	8	9	10
Length L	37	48 5	60	71 5	83	94 5	106	117 5	129	140 5

Dimensions for A40(40A), PS series 40A

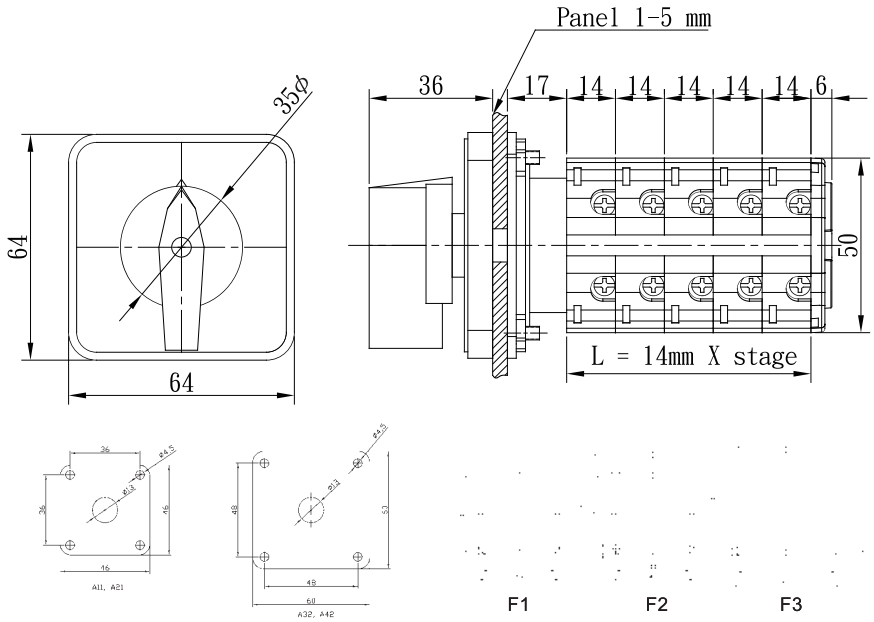



Dimensions for A80(80A) switches code No. A601~A624, PS61~PS64

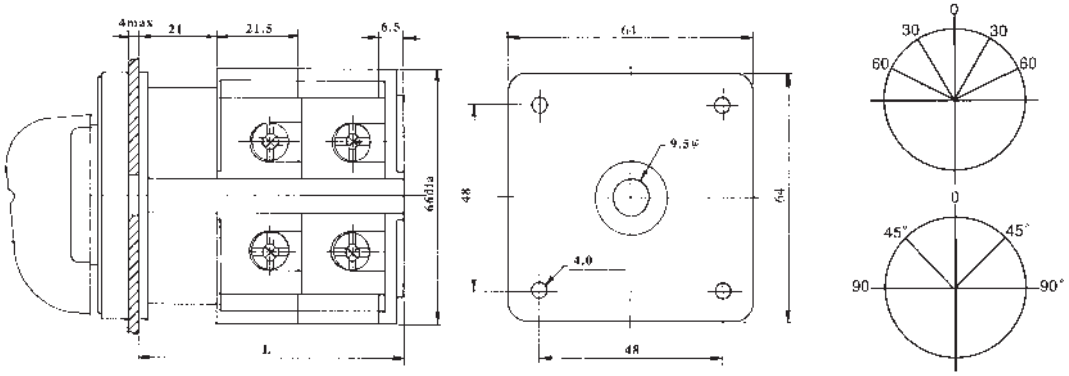

Total Number of stage	1	2	3	4	5	6
Length L	49	70.5	92	113.5	135	156.5



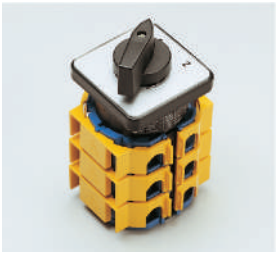

yellow safety cover

Mounting dimensions for 120A switches

Panel mounting type A3

Frame type F5

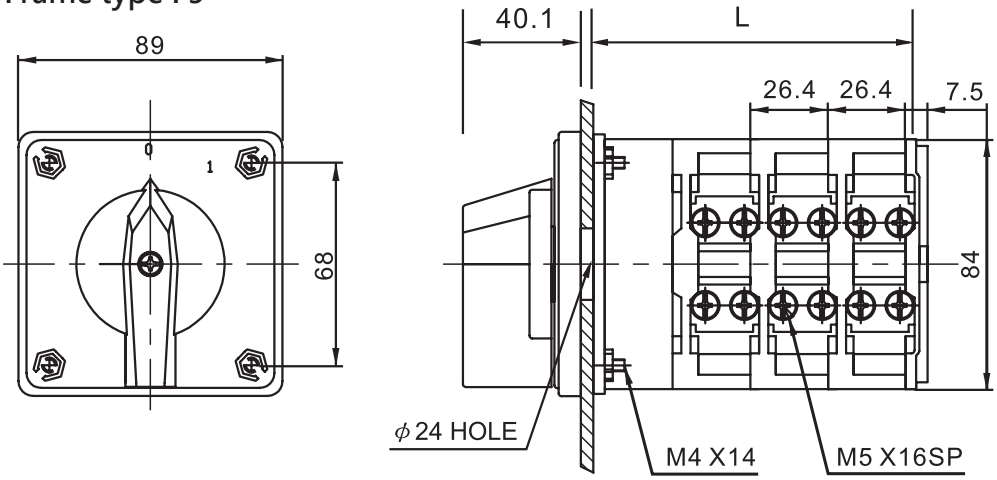



Total Number of stage	1	2	3	4	
Length L	61	87	113	140	

Cam Switch 40A

Multi-step switch with “OFF”40A

Code No.	Poles	Stage	Escutch Plate	Connecting Diagram	
A4101	1pole 2step	1	P40	2 step	
A4102	2pole 2step	2			
A4103	3pole 2step	3			
A4104	4pole 2step	4			
A4105	5pole 2step	5			
A4106	1pole 3step	2	P25	3 step	
A4107	2pole 3step	3			
A4108	3pole 3step	5			
A4109	4pole 3step	6			
A4110	5pole 3step	8			
A4111	1pole 4step	2	P41		
A4112	2pole 4step	4			
A4113	3pole 4step	6			
A4114	4pole 4step	8			
A4115	1pole 5step	3	P28A		
A4116	2pole 5step	5			
A4117	3pole 5step	8			
A4118	1pole 6step	4	P29A		
A4119	2pole 6step	7			
A4120	1pole 7step	4			
A4121	2pole 7step	8			

Motor control Switch 40A

Code No.	Poles	Stage	Escutch Plate	Connecting Diagram	
A4170	2 pole FOR-OFF-REV	3	P49 P50	FOR OFF REV	
A4171	3 pole FOR-OFF-REV	4		FOR OFF REV	 
A4172	2 pole LOW-OFF-HIGH	4	P51	LOW OFF HIGH	

Motor speed control&Reversing control

A4173	4 pole LOW-OFF-HIGH FOR-OFF-REV	7	P52-A		
A4180	O-Y-Δ Star-Delta	4	P64		