MOTOR START PUSH BUTTON

SPECIFICATIONS

Type	SP310	SP315	SP330	SP320
Rating	10A 250VAC 1.5kw	15A 250VAC 2.2kW	30A 250VAC 3.7kW	20A 250VAC 2.2kW
Mounting	Surface mounting	Surface mounting	Surface mounting	Flush mounting
Phase	3	3	3	3

SP310



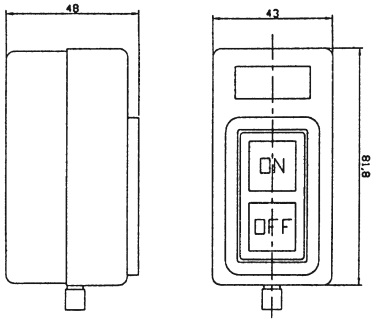

SP315



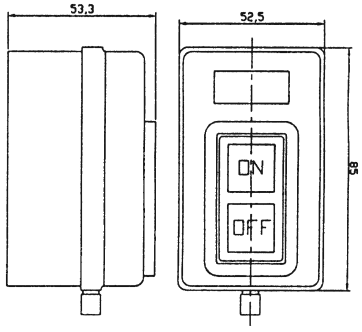

SP330



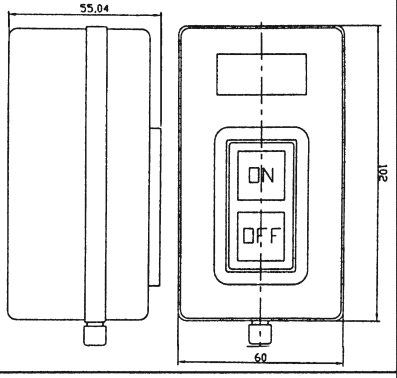

SP320



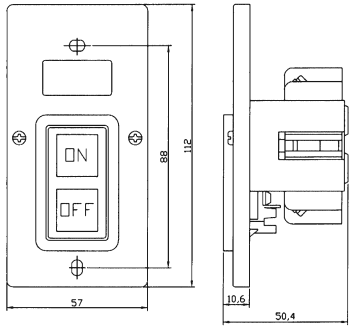

PB2 5A 250V AC



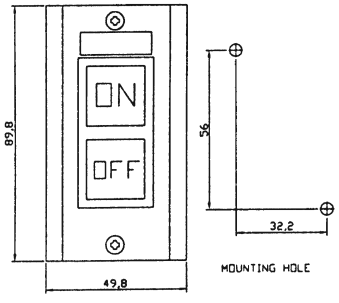

PB3 5A 250V AC



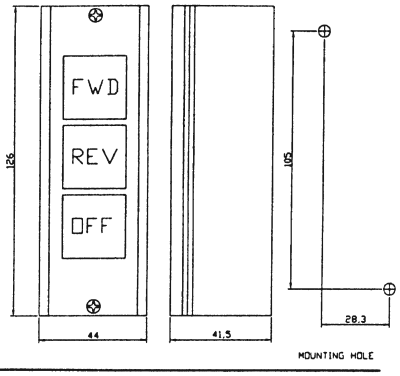

PB3B 5A 250V AC



