STANDARD AND CERTIFICATIONS

TUV Rheinland Group

License No. R50062176
EN 60947-1:2004
EN 600947-3:1999+A1
EN 600947-4-1:2001+A1
EN 60947-5-1:2004

Rating : 16A. 20A. 25A. 32A. 63A

Series		A2Y1 PS2Y2 R2Y3	CY4	A3Y1	A4Y1	A6Y1
Rated frequency	Hz	50/60				
Thermal current Ith	A	20	25	40	63	80
Utilization category AC-1 (EN 60947-4-1)	-	16A, 660V	20A, 660V	32A, 660V	40A, 660V	63A, 660V
Utilization category AC-21A (EN 60947-3)	-	16A, 600V	20A, 600V	25A, 600V	32A, 600V	40A, 600V
Utilization category AC-22A (EN 60947-3)	-	16A, 600V	20A, 600V	32A, 600V	40A, 600V	63A, 600V
Utilization category AC-12 (EN 60947-5-1)	-	6A, 240V 4A, 440V	6A, 240V 4A, 440V	14A, 240V 6A, 440V	16A, 240V 7A, 440V	--
Rated short-time withstand current Icw	A	250	350	1000	1000	1000
Rated short-time making capacity Icm	KA	None				
Rated conditional short circuit current	KA	1	1	10	10	10
Kind of SCPD	-	Fuse (gL/gG)	Fuse (gL/gG)	Fuse (gL/gG)	Fuse (gL/gG)	Fuse (gL/gG)
Rating of SCPD	A	20A	25A	40A	65A	80A
Insulation Voltage Ui	V	690				
Impulse Withstand Voltage Uimp	V	N				

CSA Certified 186663

Applicable Requirements
CAN/CSA-C22.2 No. 0-M91-General Requirements-Canadian Electrical Code, PART II
CAN/CSA-C22.2 No. 14-05-Industrial Control Equipment
UL Standard No. 508, 17th-Industrial Control Equipment
CSA Std C22.2 No. 65-93-Wire Connectors

Rating : 20A. 25A. 40A. 80A

Model No.	General Purpose		HP Rating			
			Single Phase / 2 pole		Three phase / 3 pole	
	Voltage (V)	Current (A)	110-120V	220-240V	220-240V	440-480V
PART A: AX1Y1, PSX1Y1, VSX1Y1, ASX1Y1 SERIES	600	20	1.0	2	3	5
PART B: CY4, PSX2Y2 SERIES	600	25	1.0	2	3	5
PART C: A3Y3, PSX3Y3 SERIES	600	40	3	5	7.5	10
PART D: A6Y3 SERIES	600	80	5.0	10	15	30

A11 — F1 — VS 33 — V1 — K1

Type of Switch	Type of Frame	Contact arrangement & Code No.	Type of Escutcheon Plate No.	Handle type
A11 (20A)	F1 F2 F3	Please refer to "Code No" on Page 5 to Page 16 for detail	Please refer to "Escutch Plate" on Page 5 to Page 16 for detail	Please refer to Page 4 for detail
A21 (25A)	F1 F2 F3 F4			
A32 (40A)	F3			
A42 (80A)	F3			
A53 (120A) Please refer to "Nominal Rating" for detail	F5 Please refer to "Frame Dimensions" for detail			

NOMINAL RATING

Type	Continuous Current Ith A	Motor	3ph	1ph	AC 23A - KW		AC 3A - KW	
					3ph	1ph	3ph	1ph
A11	20A 25A 600V AC	110V-120V		1HP				
		220V-240V	3HP	2HP	3.7	2.5	3	2.2
A21		440V-480V	5HP		7.5	3.7	5.5	3
		660V-690V			7.5	4.0	5.5	3
A32	40A 600V AC	110V-120V		3HP				
		220V-240V	7.5HP	5HP	7.5	3.5	5.5	3
		440V-480V	10HP		10	3.8	7.5	3.5
		660V-690V			13	5.5	10	5
A42	80A 600V AC	110V-120V		5HP				
		220V-240V	15HP	10HP	15	11	11	3.5
		440V-480V	30HP		25	15	18.5	10
		660V-690V			25	15	18.5	10
A53	115A 600V AC	110V-120V	10HP	5HP				
		220V-240V	20HP	10HP	30	15	15	7.5
		440V-480V	30HP		45	22	30	13
		660V-690V			45	18.5	30	11

DIMENSIONS FOR TYPE A11, A21, A32, A42, A53

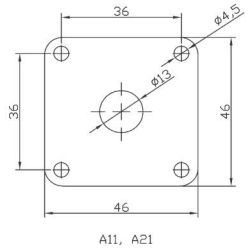

A11, A21

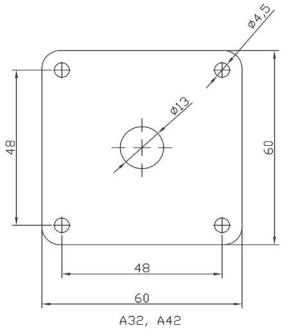

A32, A42

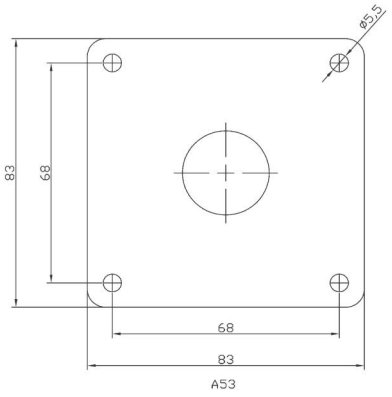

A53

FRAME DIMENSIONS

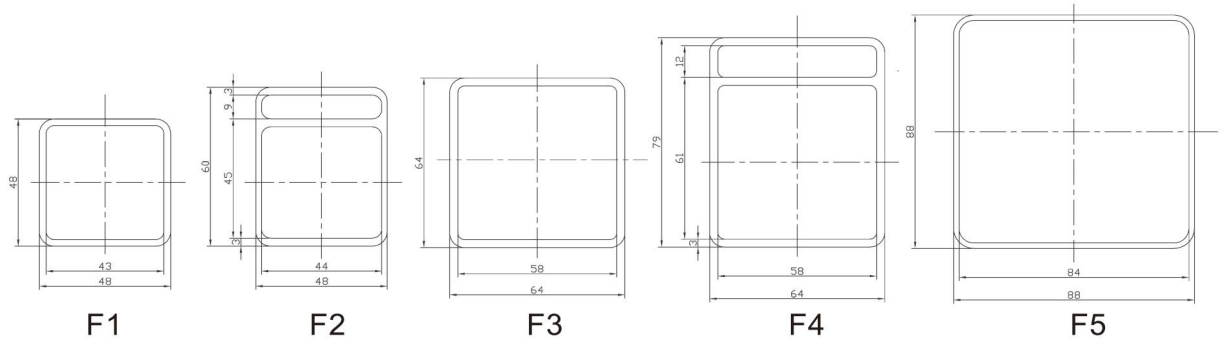

F1 F2 F3 F4 F5

Dimensions for A2, PS2, R2, switches (20A)

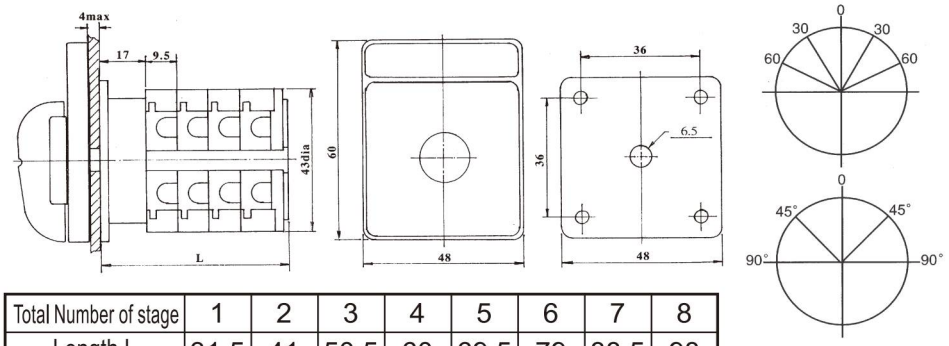



Total Number of stage	1	2	3	4	5	6	7	8
Length L	31.5	41	50.5	60	69.5	79	88.5	98

Dimensions for C2 series switches (20A, 25A)

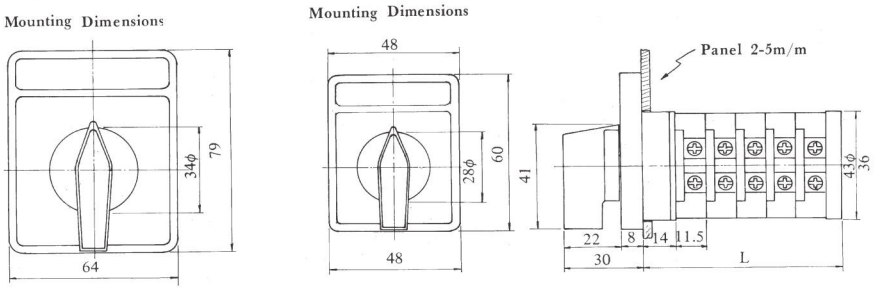

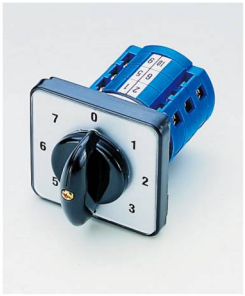

Total Number of stage	1	2	3	4	5	6	7	8	9	10
Length L	37	48.5	60	71.5	83	94.5	106	117.5	129	140.5

Dimensions mounting for A3, A4, A6 switches (32A, 40A,63A)

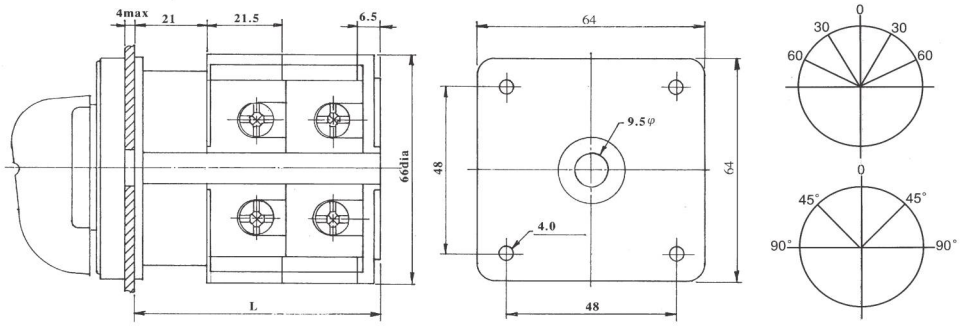





yellow safety cover

Total Number of stage	1	2	3	4	5	6
Length L	49	70.5	92	113.5	135	156.5

connecting diagram

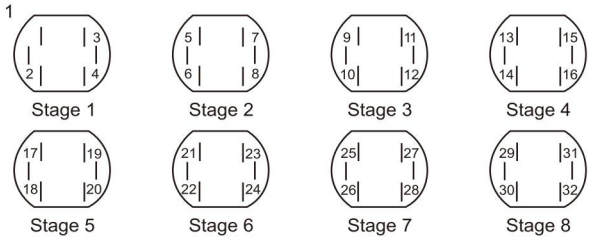

CENTER HOLE MOUNTING

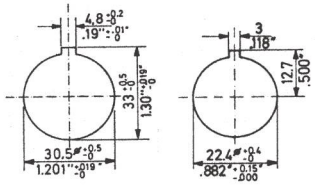



ON-OFF switches 45°, 60°, 90°, switching 20A

Code No	Function	Stage	Escutch plate	Connecting Diagram
A201	1 Pole	1	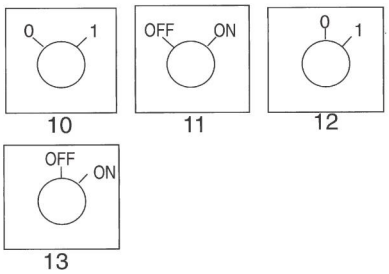	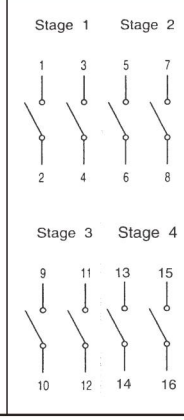  
A201A	2 Pole	1		
A202	3 Pole	2		
A202A	4 Pole	2		
A203	5 Pole	3		
A203A	6 Pole	3		
A204	7 Pole	4		
A204A	8 Pole	4		
A205	9 Pole	5		
A205A	10 Pole	5		
A206	11 Pole	6		
A206A	12 Pole	6		

Change over switches without OFF 90°, 60°, 45°, 30°, switching 20A (Made before Break)

A207	1 Pole	1	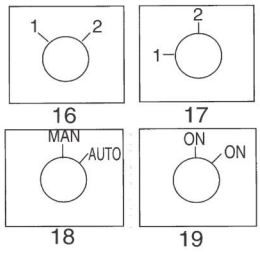	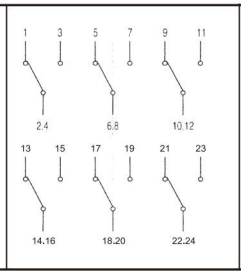 
A208	2 Pole	2		
A209	3 Pole	3		
A210	4 Pole	4		
A211	5 Pole	5		
A212	6 Pole	6		

Change over switches without OFF with electrically isolated contacts 20A

A213	1 Pole	1	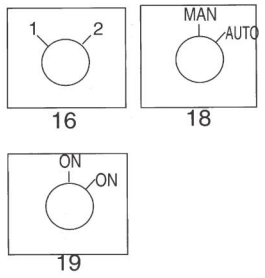	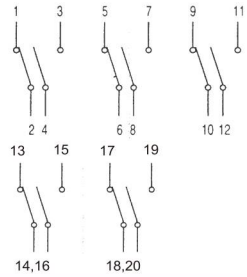 
A214	2 Pole	2		
A215	3 Pole	3		
A216	4 Pole	4		

Change over switches with center OFF 60°, 45°, 90° switching 20A

A217	1 Pole	1	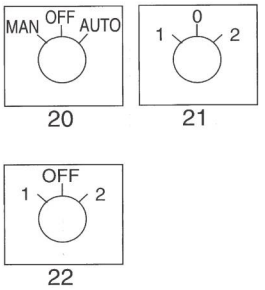	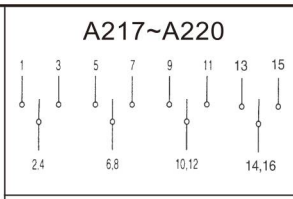  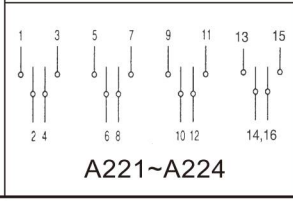 
A218	2 Pole	2		
A219	3 Pole	3		
A220	4 Pole	4		
A221	1 Pole	1		
A222	2 Pole	2		
A223	3 Pole	3		
A224	4 Pole	4		